GigaDevice Semiconductor Inc.

GD32F350xx
Arm® Cortex®-M4 32-bit MCU

Datasheet

Revision 3.4

(Jul. 2026)

Table of Contents

Table of Contents 1
List of Figures 4
List of Tables 5
1 General description 7
2 Device overview 8
2.1 Device information 8
2.2 Block diagram 10
2.3 Pinouts and pin assignment 11
2.4 Memory map 13
2.5 Clock tree 15
2.6 Pin definitions 16
2.6.1 GD32F350Rx LQFP64 pin definitions 16
2.6.2 GD32F350Cx LQFP48 pin definitions 20
2.6.3 GD32F350Kx QFN32 pin definitions 24
2.6.4 GD32F350Gx QFN28 pin definitions 26
2.6.5 GD32F350xx pin alternate functions 30
3 Functional description 34
3.1 Arm® Cortex®-M4 core 34
3.2 On-chip memory 34
3.3 Clock, reset and supply management 35
3.4 Boot modes 35
3.5 Power saving modes 36
3.6 Analog to digital converter (ADC) 36
3.7 Digital to analog converter (DAC) 37
3.8 DMA 37
3.9 General-purpose inputs/outputs (GPIOs) 38
3.10 Timers and PWM generation 38
3.11 Real time clock (RTC) 39
3.12 Inter-integrated circuit (I2C) 40
3.13 Serial peripheral interface (SPI) 40

3.14 Universal synchronous asynchronous receiver transmitter (USART) 40
3.15 Inter-IC sound (I2S) 41
3.16 HDMI CEC 41
3.17 Universal serial bus full-speed interface (USBFS) 41
3.18 Touch sensing interface (TSI) 42
3.19 Comparators (CMP) 42
3.20 Debug mode 42
3.21 Package and operation temperature 42
4 Electrical characteristics 43
4.1 Absolute maximum ratings 43
4.2 Operating conditions characteristics 43
4.3 Power consumption 45
4.4 EMC characteristics 51
4.5 Power supply supervisor characteristics 52
4.6 Electrical sensitivity 53
4.7 External clock characteristics 53
4.8 Internal clock characteristics 55
4.9 PLL characteristics 57
4.10 Memory characteristics 58
4.11 NRST pin characteristics 58
4.12 GPIO characteristics 59
4.13 ADC characteristics 60
4.14 Temperature sensor characteristics 62
4.15 Comparators characteristics 62
4.16 DAC characteristics 63
4.17 I2C characteristics 64
4.18 SPI characteristics 66
4.19 I2S characteristics 67
4.20 USART characteristics 69
4.21 USBFS characteristics 69
4.22 TIMER characteristics 70

4.23 WDGT characteristics 70
4.24 Parameter conditions 71
5 Package information 72
5.1 LQFP64 package outline dimensions 72
5.2 LQFP48 package outline dimensions 74
5.3 QFN32 package outline dimensions 76
5.4 QFN28 package outline dimensions 78
5.5 Thermal characteristics 80
6 Ordering information 82
7 Revision history 83

List of Figures

Figure 2-1. GD32F350xx block diagram 10
Figure 2-2. GD32F350Rx LQFP64 pinouts 11
Figure 2-3. GD32F350Cx LQFP48 pinouts 11
Figure 2-4. GD32F350Kx QFN32 pinouts 12
Figure 2-5. GD32F350Gx QFN28 pinouts 12
Figure 2-6. GD32F350xx clock tree 15
Figure 4-1. Recommended power supply decoupling capacitors(1) 44
Figure 4-2. Typical supply current consumption in Run mode 50
Figure 4-3. Typical supply current consumption in Sleep mode 51
Figure 4-4. Recommended external NRST pin circuit(1) 58
Figure 4-5. I/O port AC characteristics definition 60
Figure 4-6. CMP hysteresis 63
Figure 4-7. I2C bus timing diagram 65
Figure 4-8. SPI timing diagram - master mode 66
Figure 4-9. SPI timing diagram - slave mode 67
Figure 4-10. I2S timing diagram - master mode 68
Figure 4-11. I2S timing diagram - slave mode 68
Figure 4-12. USBFS timings: definition of data signal rise and fall time 70
Figure 5-1. LQFP64 package outline 72
Figure 5-2. LQFP64 recommended footprint 73
Figure 5-3. LQFP48 package outline 74
Figure 5-4. LQFP48 recommended footprint 75
Figure 5-5. QFN32 package outline 76
Figure 5-6. QFN32 recommended footprint 77
Figure 5-7. QFN28 package outline 78
Figure 5-8. QFN28 recommended footprint 79

List of Tables

Table 2-1. GD32F350xx devices features and peripheral list 8
Table 2-2. GD32F350xx memory map 13
Table 2-3. GD32F350Rx LQFP64 pin definitions 16
Table 2-4. GD32F350Cx LQFP48 pin definitions 20
Table 2-5. GD32F350Kx QFN32 pin definitions 24
Table 2-6. GD32F350Gx QFN28 pin definitions 26
Table 2-7. Port A alternate functions summary 30
Table 2-8. Port B alternate functions summary 31
Table 2-9. Port C alternate functions summary 32
Table 2-10. Port D alternate functions summary 32
Table 2-11. Port F alternate functions summary 33
Table 4-1. Absolute maximum ratings(1) (4) 43
Table 4-2. DC operating conditions 43
Table 4-3. Clock frequency(1) 44
Table 4-4. Operating conditions at Power up/ Power down(1) 44
Table 4-5. Start-up timings of Operating conditions(1) (2) (3) 44
Table 4-6. Power saving mode wakeup timings characteristics(1) 45
Table 4-7. Power consumption characteristics (2)(3)(4)(5)(6) 45
Table 4-8. EMS characteristics (1) 51
Table 4-9. EMI characteristics(1) 51
Table 4-10. Power supply supervisor characteristics 52
Table 4-11. ESD characteristics (1) 53
Table 4-12. Static latch-up characteristics (1) 53
Table 4-13. High speed external clock (HXTAL) generated from a crystal/ceramic characteristics . 53
Table 4-14. High speed external user clock characteristics (HXTAL in bypass mode) 54
Table 4-15. Low speed external clock (LXTAL) generated from a crystal/ceramic characteristics .. 54
Table 4-16. Low speed external user clock characteristics (LXTAL in bypass mode) 55
Table 4-17. High speed internal clock (IRC8M) characteristics 55
Table 4-18. Low speed internal clock (IRC40K) characteristics 56
Table 4-19. High speed internal clock (IRC28M) characteristics 56
Table 4-20. High speed internal clock (IRC48M) characteristics 56
Table 4-21. PLL characteristics 57
Table 4-22. Flash memory characteristics(1) 58
Table 4-23. NRST pin characteristics 58
Table 4-24. I/O port DC characteristics (1) (3) 59
Table 4-25. I/O port AC characteristics (1) (2) 59
Table 4-26. ADC characteristics 60
Table 4-27. ADC R_{AIN} max for f_{ADC} = 36 MHz (1) 61
Table 4-28. ADC dynamic accuracy at f_{ADC} = 14 MHz (1) 61
Table 4-29. ADC dynamic accuracy at f_{ADC} = 28 MHz (1) 62

Table 4-30. ADC dynamic accuracy at f_{ADC} = 36 MHz (1) 62
Table 4-31. ADC static accuracy at f_{ADC} = 14 MHz (1) 62
Table 4-32. Temperature sensor characteristics (1) 62
Table 4-33. CMP characteristics 62
Table 4-34. DAC characteristics 63
Table 4-35. I2C characteristics (1) (2) (3) 64
Table 4-36. Standard SPI characteristics 66
Table 4-37. I2S characteristics 67
Table 4-38. USART characteristics (1) 69
Table 4-39. USBFS start up time 69
Table 4-40. USBFS DC electrical characteristics 69
Table 4-41. USBFS electrical characteristics (1) 69
Table 4-42. TIMER characteristics (1) 70
Table 4-43. FWDGT min/max timeout period at 40 kHz (IRC40K) (1) 70
Table 4-44. WWDGT min-max timeout value at 54 MHz (f_{PCLK1}) (1) 71
Table 5-1. LQFP64 package dimensions 72
Table 5-2. LQFP48 package dimensions 74
Table 5-3. QFN32 package dimensions 76
Table 5-4. QFN28 package dimensions 78
Table 5-5. Package thermal characteristics(1) 80
Table 6-1. Part ordering code for GD32F350xx devices 82
Table 7-1. Revision history 83

1 General description

The GD32F350xx device belongs to the value line of GD32 MCU family. It is a new 32-bit general-purpose microcontroller based on the Arm® Cortex®-M4 RISC core with best cost-performance ratio in terms of enhanced processing capacity, reduced power consumption and peripheral set. The Cortex®-M4 core features implement a full set of DSP instructions to address digital signal control markets that demand an efficient, easy-to-use blend of control and signal processing capabilities. It also provides a powerful trace technology for enhanced application security and advanced debug support.

The GD32F350xx device incorporates the Arm® Cortex®-M4 32-bit processor core operating at 108 MHz frequency with Flash accesses zero wait states to obtain maximum efficiency. It provides up to 128 KB on-chip Flash memory and up to 16 KB SRAM memory. An extensive range of enhanced I/Os and peripherals connected to two APB buses. The devices offer one 12-bit ADC, one 12-bit DAC and two comparators, up to five general 16-bit timers, a general 32-bit timer, a basic timer, a PWM advanced timer, as well as standard and advanced communication interfaces: up to two SPIs, two I2Cs, two USARTs, an I2S, a HDMI-CEC, a TSI and an USBFS.

The device operates from a 2.6 to 3.6 V power supply and available in -40 to +85 °C temperature range for grade 6 device, and -40 to +105 °C temperature range for grade 7 device. Several power saving modes provide the flexibility for maximum optimization between wakeup latency and power consumption, an especially important consideration in low power applications.

The above features make the GD32F350xx devices suitable for a wide range of applications, especially in areas such as industrial control, motor drives, user interface, power monitor and alarm systems, consumer and handheld equipment, gaming and GPS, E-bike and so on.



2 Device overview

2.1 Device information

Table 2-1. GD32F350xx devices features and peripheral list

Part Number		GD32F350xx														
		G4	G6	G8	K4	K6	K8	KB	C4	C6	C8	CB	R4	R6	R8	RB
Flash	Code area (KB)	16	32	64	16	32	64	64	16	32	64	64	16	32	64	64
	Data area (KB)	0	0	0	0	0	0	64	0	0	0	64	0	0	0	64
	Total (KB)	16	32	64	16	32	64	128	16	32	64	128	16	32	64	128
SRAM (KB)		4	6	8	4	6	8	16	4	6	8	16	4	8	16	16
Timers	General timer (32-bit)	1 (1)	1 (1)	1 (1)	1 (1)	1 (1)	1 (1)	1 (1)	1 (1)	1 (1)	1 (1)	1 (1)	1 (1)	1 (1)	1 (1)	1 (1)
	General timer (16-bit)	5 (2,13-16)	5 (2,13-16)	5 (2,13-16)	5 (2,13-16)	5 (2,13-16)	5 (2,13-16)	5 (2,13-16)	5 (2,13-16)	5 (2,13-16)	5 (2,13-16)	5 (2,13-16)	5 (2,13-16)	5 (2,13-16)	5 (2,13-16)	5 (2,13-16)
	Advanced timer (16-bit)	1 (0)	1 (0)	1 (0)	1 (0)	1 (0)	1 (0)	1 (0)	1 (0)	1 (0)	1 (0)	1 (0)	1 (0)	1 (0)	1 (0)	1 (0)
	Basic timer (16-bit)	1 (5)	1 (5)	1 (5)	1 (5)	1 (5)	1 (5)	1 (5)	1 (5)	1 (5)	1 (5)	1 (5)	1 (5)	1 (5)	1 (5)	1 (5)
	SysTick	1	1	1	1	1	1	1	1	1	1	1	1	1	1	1
	Watchdog	2	2	2	2	2	2	2	2	2	2	2	2	2	2	2
	RTC	1	1	1	1	1	1	1	1	1	1	1	1	1	1	1
Connectivity	USART	1 (0)	2 (0-1)	2 (0-1)	1 (0)	2 (0-1)	2 (0-1)	2 (0-1)	1 (0)	2 (0-1)	2 (0-1)	2 (0-1)	1 (0)	2 (0-1)	2 (0-1)	2 (0-1)
	I2C	1 (0)	1 (0)	2 (0-1)	1 (0)	1 (0)	2 (0-1)	2 (0-1)	1 (0)	1 (0)	2 (0-1)	2 (0-1)	1 (0)	1 (0)	2 (0-1)	2 (0-1)
	SPI/I2S	1/1 (0)/(0)	1/1 (0)/(0)	2/1 (0-1)/(0)	1/1 (0)/(0)	1/1 (0)/(0)	2/1 (0-1)/(0)	2/1 (0-1)/(0)	1/1 (0)/(0)	1/1 (0)/(0)	2/1 (0-1)/(0)	2/1 (0-1)/(0)	1/1 (0)/(0)	1/1 (0)/(0)	2/1 (0-1)/(0)	2/1 (0-1)/(0)
	USBFS	1	1	1	1	1	1	1	1	1	1	1	1	1	1	1
	HDMI-CEC	1	1	1	1	1	1	1	1	1	1	1	1	1	1	1
GPIO		24	24	24	27	27	27	27	39	39	39	39	55	55	55	55
TSI (Channels)		14	14	14	14	14	14	14	17	17	17	17	18	18	18	18
CMP		2	2	2	2	2	2	2	2	2	2	2	2	2	2	2
EXTI		15	15	15	16	16	16	16	16	16	16	16	16	16	16	16

Part Number		GD32F350xx														
		G4	G6	G8	K4	K6	K8	KB	C4	C6	C8	CB	R4	R6	R8	RB
ADC	Units	1	1	1	1	1	1	1	1	1	1	1	1	1	1	1
	Channels (External)	10	10	10	10	10	10	10	10	10	10	10	16	16	16	16
	Channels (Internal)	3	3	3	3	3	3	3	3	3	3	3	3	3	3	3
DAC	Units	1	1	1	1	1	1	1	1	1	1	1	1	1	1	1
	Channels	1	1	1	1	1	1	1	1	1	1	1	1	1	1	1
Package		QFN28			QFN32				LQFP48				LQFP64			

2.2 Block diagram

Figure 2-1. GD32F350xx block diagram

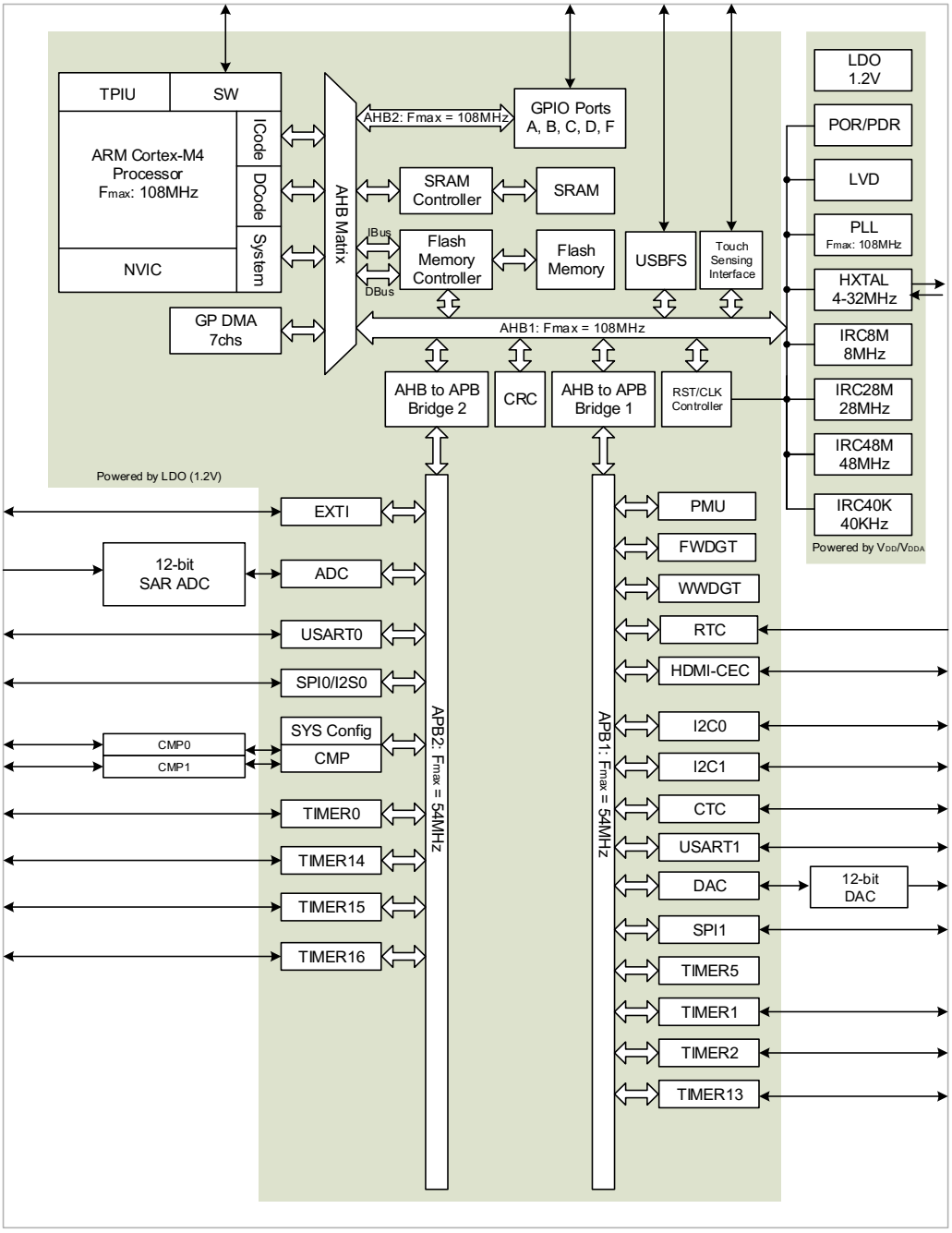

2.3 Pinouts and pin assignment

Figure 2-2. GD32F350Rx LQFP64 pinouts

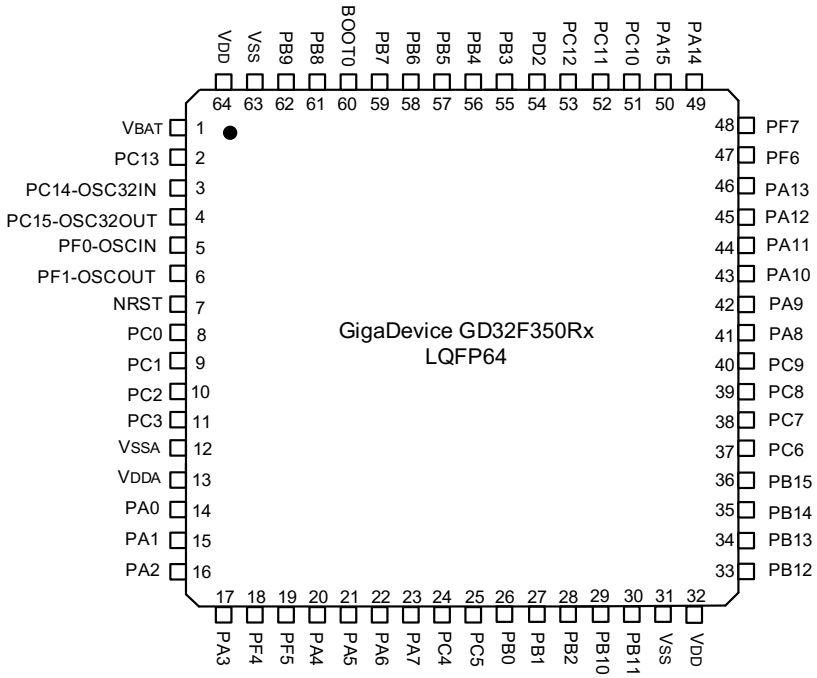

Figure 2-3. GD32F350Cx LQFP48 pinouts

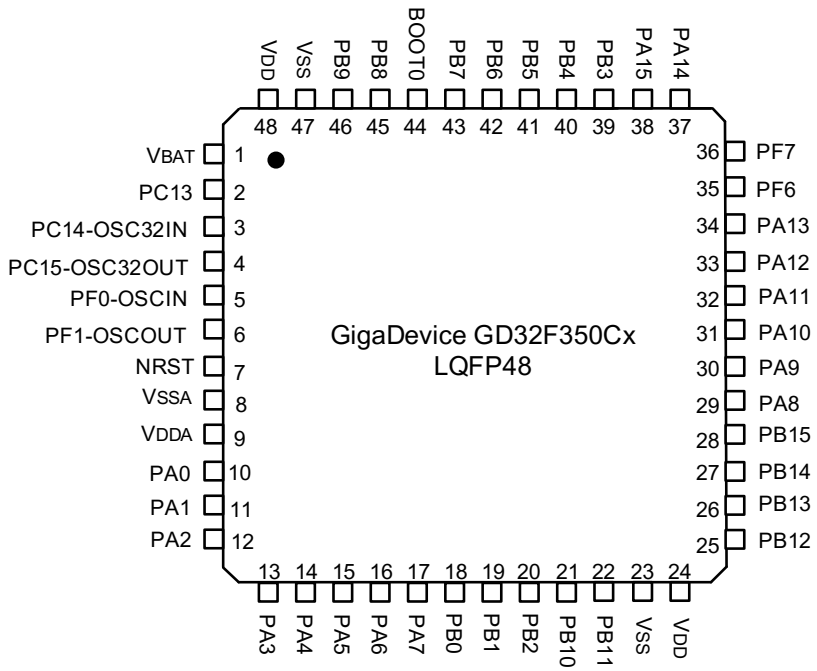

Figure 2-4. GD32F350Kx QFN32 pinouts

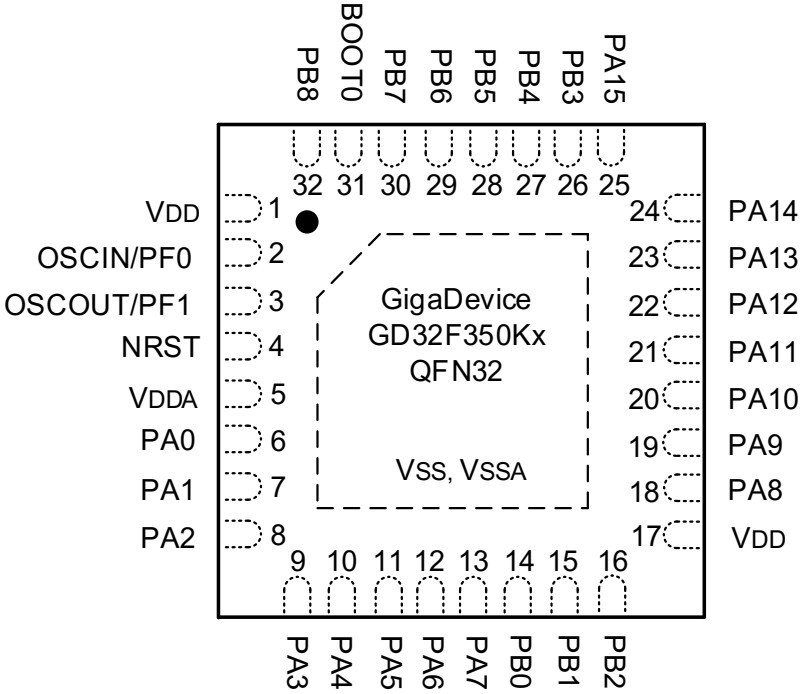

Figure 2-5. GD32F350Gx QFN28 pinouts

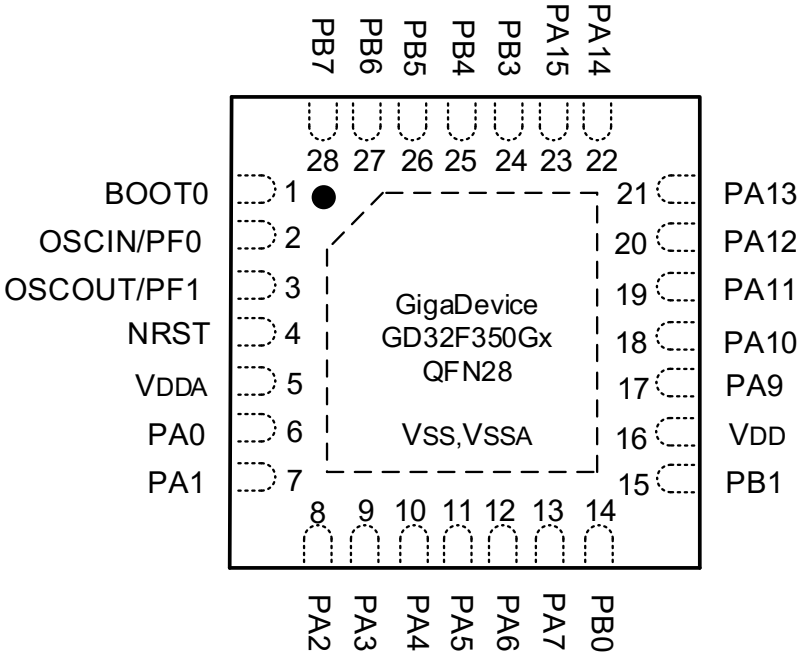

2.4 Memory map

Table 2-2. GD32F350xx memory map

Pre-defined Regions	Bus	Address	Peripherals
		0xE000 0000 - 0xE00F FFFF	Cortex®-M4 internal peripherals
External Device		0xA000 0000 - 0xDFFF FFFF	Reserved
External RAM		0x6000 0000 - 0x9FFF FFFF	Reserved
Peripherals	AHB1	0x5004 0000 - 0x5FFF FFFF	Reserved
		0x5000 0000 - 0x5003 FFFF	USBFS
	AHB2	0x4800 1800 - 0x4FFF FFFF	Reserved
		0x4800 1400 - 0x4800 17FF	GPIOF
		0x4800 1000 - 0x4800 13FF	Reserved
		0x4800 0C00 - 0x4800 0FFF	GPIOD
		0x4800 0800 - 0x4800 0BFF	GPIOC
		0x4800 0400 - 0x4800 07FF	GPIOB
		0x4800 0000 - 0x4800 03FF	GPIOA
	AHB1	0x4002 4400 - 0x47FF FFFF	Reserved
		0x4002 4000 - 0x4002 43FF	TSI
		0x4002 3400 - 0x4002 3FFF	Reserved
		0x4002 3000 - 0x4002 33FF	CRC
		0x4002 2400 - 0x4002 2FFF	Reserved
		0x4002 2000 - 0x4002 23FF	FMC
		0x4002 1400 - 0x4002 1FFF	Reserved
		0x4002 1000 - 0x4002 13FF	RCU
		0x4002 0400 - 0x4002 0FFF	Reserved
		0x4002 0000 - 0x4002 03FF	DMA
	APB2	0x4001 8000 - 0x4001 FFFF	Reserved
		0x4001 5C00 - 0x4001 7FFF	Reserved
		0x4001 4C00 - 0x4001 5BFF	Reserved
		0x4001 4800 - 0x4001 4BFF	TIMER16
		0x4001 4400 - 0x4001 47FF	TIMER15
		0x4001 4000 - 0x4001 43FF	TIMER14
		0x4001 3C00 - 0x4001 3FFF	Reserved
		0x4001 3800 - 0x4001 3BFF	USART0
		0x4001 3400 - 0x4001 37FF	Reserved
		0x4001 3000 - 0x4001 33FF	SPI0/I2S0
		0x4001 2C00 - 0x4001 2FFF	TIMER0
		0x4001 2800 - 0x4001 2BFF	Reserved
		0x4001 2400 - 0x4001 27FF	ADC
		0x4001 0800 - 0x4001 23FF	Reserved

Pre-defined Regions	Bus	Address	Peripherals
		0x4001 0400 - 0x4001 07FF	EXTI
		0x4001 0000 - 0x4001 03FF	SYSCFG + CMP
	APB1	0x4000 CC00 - 0x4000 FFFF	Reserved
		0x4000 C800 - 0x4000 CBFF	CTC
		0x4000 C400 - 0x4000 C7FF	Reserved
		0x4000 C000 - 0x4000 C3FF	Reserved
		0x4000 8000 - 0x4000 BFFF	Reserved
		0x4000 7C00 - 0x4000 7FFF	Reserved
		0x4000 7800 - 0x4000 7BFF	CEC
		0x4000 7400 - 0x4000 77FF	DAC0
		0x4000 7000 - 0x4000 73FF	PMU
		0x4000 6400 - 0x4000 6FFF	Reserved
		0x4000 6000 - 0x4000 63FF	Reserved
		0x4000 5C00 - 0x4000 5FFF	Reserved
		0x4000 5800 - 0x4000 5BFF	I2C1
		0x4000 5400 - 0x4000 57FF	I2C0
		0x4000 4800 - 0x4000 53FF	Reserved
		0x4000 4400 - 0x4000 47FF	USART1
		0x4000 4000 - 0x4000 43FF	Reserved
		0x4000 3C00 - 0x4000 3FFF	Reserved
		0x4000 3800 - 0x4000 3BFF	SPI1
		0x4000 3400 - 0x4000 37FF	Reserved
		0x4000 3000 - 0x4000 33FF	FWDGT
		0x4000 2C00 - 0x4000 2FFF	WWDGT
		0x4000 2800 - 0x4000 2BFF	RTC
		0x4000 2400 - 0x4000 27FF	Reserved
		0x4000 2000 - 0x4000 23FF	TIMER13
		0x4000 1400 - 0x4000 1FFF	Reserved
		0x4000 1000 - 0x4000 13FF	TIMER5
		0x4000 0800 - 0x4000 0FFF	Reserved
		0x4000 0400 - 0x4000 07FF	TIMER2
		0x4000 0000 - 0x4000 03FF	TIMER1
SRAM		0x2000 4000 - 0x3FFF FFFF	Reserved
		0x2000 0000 - 0x2000 3FFF	SRAM
Code		0x1FFF FC00 - 0x1FFF FFFF	Reserved
		0x1FFF F800 - 0x1FFF FBFF	Option bytes
		0x1FFF EC00 - 0x1FFF F7FF	System memory
		0x0810 0000 - 0x1FFF EBFF	Reserved
		0x0800 0000 - 0x0801 FFFF	Main Flash memory
		0x0010 0000 - 0x07FF FFFF	Reserved

Pre-defined Regions	Bus	Address	Peripherals
		0x0000 0000 - 0x000F FFFF	Aliased to Flash or system memory

2.5 Clock tree

Figure 2-6. GD32F350xx clock tree

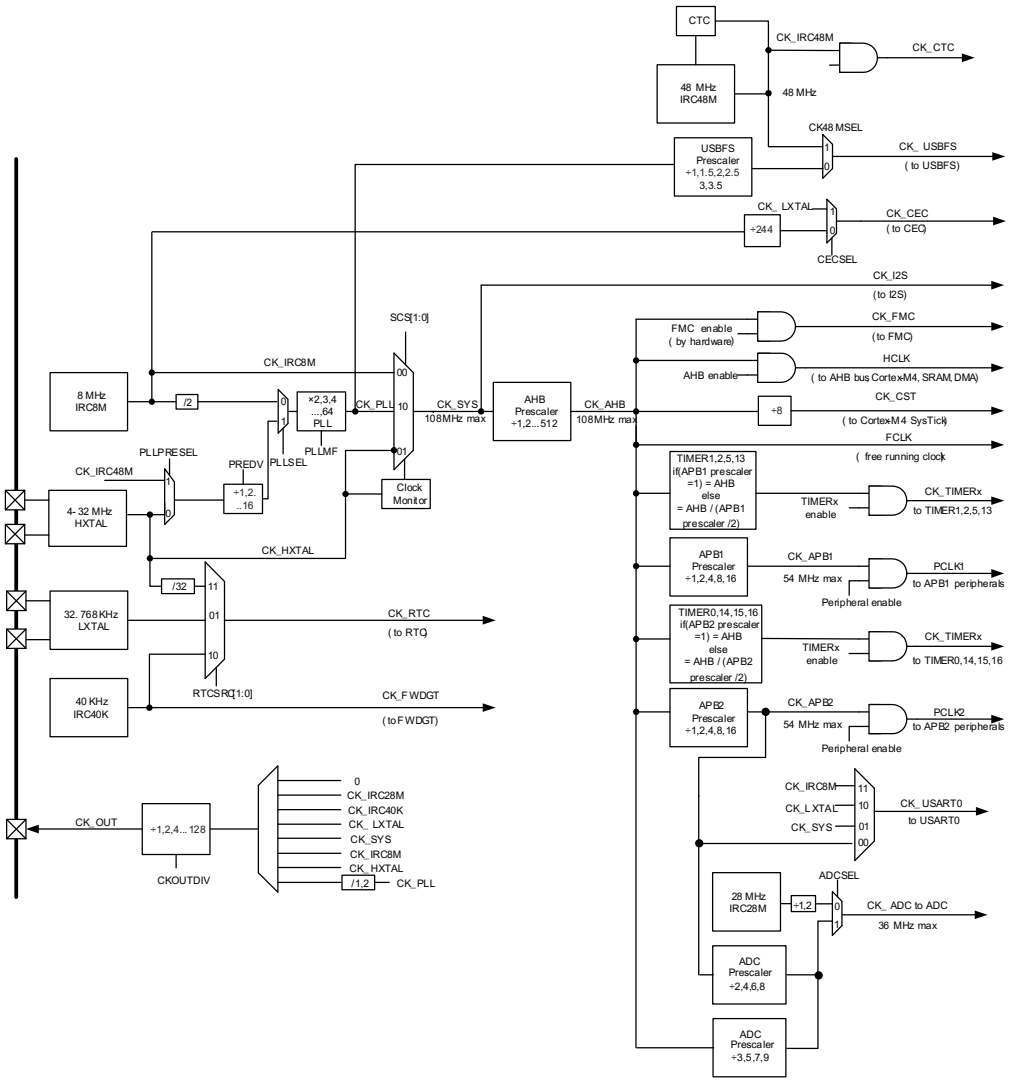

Note:

If the APB prescaler is 1, the timer clock frequencies are set to AHB frequency divide by 1. Otherwise, they are set to the AHB frequency divide by half of APB prescaler.

Legend:

HXTAL: High speed crystal oscillator

LXTAL: Low speed crystal oscillator

IRC8M: Internal 8M RC oscillators

IRC40K: Internal 40K RC oscillator
IRC48M: Internal 48M RC oscillators
IRC28M: Internal 28M RC oscillators

2.6 Pin definitions

2.6.1 GD32F350Rx LQFP64 pin definitions

Table 2-3. GD32F350Rx LQFP64 pin definitions

GD32F350Rx LQFP64				
Pin Name	**Pins**	**Pin Type(1)**	**I/O Level(2)**	**Functions description**
V_{BAT}	1	P		Default: V_{BAT}
PC13-TAMPER-RTC	2	I/O		Default: PC13 Additional: RTC_TAMP0, RTC_TS, RTC_OUT, WKUP1
PC14-OSC32IN	3	I/O		Default: PC14 Additional: OSC32IN
PC15-OSC32OUT	4	I/O		Default: PC15 Additional: OSC32OUT
PF0-OSCIN	5	I/O	5VT	Default: PF0 Alternate: CTC_SYNC Additional: OSCIN
PF1-OSCOUT	6	I/O	5VT	Default: PF1 Additional: OSCOUT
NRST	7	I/O		Default: NRST
PC0	8	I/O		Default: PC0 Alternate: EVENTOUT Additional: ADC_IN10
PC1	9	I/O		Default: PC1 Alternate: EVENTOUT Additional: ADC_IN11
PC2	10	I/O		Default: PC2 Alternate: EVENTOUT Additional: ADC_IN12
PC3	11	I/O		Default: PC3 Alternate: EVENTOUT Additional: ADC_IN13
V_{SSA}	12	P		Default: V_{SSA}
V_{DDA}	13	P		Default: V_{DDA}
PA0-WKUP	14	I/O		Default: PA0 Alternate: USART0_CTS(3), USART1_CTS(4), TIMER1_CH0, TIMER1_ETI, CMP0_OUT, TSI_G0_IO0, I2C1_SCL(5)

GD32F350Rx LQFP64				
Pin Name	**Pins**	**Pin Type(1)**	**I/O Level(2)**	**Functions description**
				Additional: ADC_IN0, CMP0_IM6, RTC_TAMP1, WKUP0
PA1	15	I/O		Default: PA1 Alternate: USART0_RTS(3), USART1_RTS(4), TIMER1_CH1, TSI_G0_IO1, I2C1_SDA(5), EVENTOUT Additional: ADC_IN1, CMP0_IP
PA2	16	I/O		Default: PA2 Alternate: USART0_TX(3), USART1_TX(4), TIMER1_CH2, TIMER14_CH0 , CMP1_OUT,TSI_G0_IO2 Additional: ADC_IN2, CMP1_IM6
PA3	17	I/O		Default: PA3 Alternate: USART0_RX(3), USART1_RX(4), TIMER1_CH3, TIMER14_CH1, TSI_G0_IO3 Additional: ADC_IN3, CMP1_IP
PF4	18	I/O	5VT	Default: PF4 Alternate: EVENTOUT
PF5	19	I/O	5VT	Default: PF5 Alternate: EVENTOUT
PA4	20	I/O		Default: PA4 Alternate: SPI0_NSS, I2S0_WS, USART0_CK(3), USART1_CK(4), TIMER13_CH0, TSI_G1_IO0, SPI1_NSS(5) Additional: ADC_IN4, CMP0_IM4, CMP1_IM4, DAC0_OUT0
PA5	21	I/O		Default: PA5 Alternate: SPI0_SCK, I2S0_CK, CEC, TIMER1_CH0, TIMER1_ETI, TSI_G1_IO1 Additional: ADC_IN5, CMP0_IM5, CMP1_IM5
PA6	22	I/O		Default: PA6 Alternate: SPI0_MISO, I2S0_MCK, TIMER2_CH0, TIMER0_BRKIN, TIMER15_CH0, CMP0_OUT, TSI_G1_IO2, EVENTOUT Additional: ADC_IN6
PA7	23	I/O		Default: PA7 Alternate: SPI0_MOSI, I2S0_SD, TIMER2_CH1, TIMER13_CH0, TIMER0_CH0_ON, TIMER16_CH0, CMP1_OUT, TSI_G1_IO3, EVENTOUT Additional: ADC_IN7
PC4	24	I/O		Default: PC4 Alternate: EVENTOUT Additional: ADC_IN14
PC5	25	I/O		Default: PC5 Alternate: TSI_G2_IO0

GD32F350Rx LQFP64				
Pin Name	**Pins**	**Pin Type(1)**	**I/O Level(2)**	**Functions description**
				Additional: ADC_IN15, WKUP4
PB0	26	I/O		Default: PB0 Alternate: TIMER2_CH2, TIMER0_CH1_ON, TSI_G2_IO1, USART1_RX(4), EVENTOUT Additional: ADC_IN8
PB1	27	I/O		Default: PB1 Alternate: TIMER2_CH3, TIMER13_CH0, TIMER0_CH2_ON, TSI_G2_IO2, SPI1_SCK(5) Additional: ADC_IN9
PB2	28	I/O	5VT	Default: PB2 Alternate: TSI_G2_IO3
PB10	29	I/O	5VT	Default: PB10 Alternate: I2C0_SCL(3),I2C1_SCL(5), CEC, TIMER1_CH2, TSITG, SPI1_IO2(5)
PB11	30	I/O	5VT	Default: PB11 Alternate: I2C0_SDA(3),I2C1_SDA(5), TIMER1_CH3, TSI_G5_IO0, EVENTOUT, SPI1_IO3(5)
V_{SS}	31	P		Default: V_{SS}
V_{DD}	32	P		Default: V_{DD}
PB12	33	I/O	5VT	Default: PB12 Alternate: SPI0_NSS(3), SPI1_NSS(5), TIMER0_BRKIN, TSI_G5_IO1, I2C1_SMBA(5), EVENTOUT
PB13	34	I/O	5VT	Default: PB13 Alternate: SPI0_SCK(3), SPI1_SCK(5), TIMER0_CH0_ON, TSI_G5_IO2
PB14	35	I/O	5VT	Default: PB14 Alternate: SPI0_MISO(3), SPI1_MISO(5), TIMER0_CH1_ON, TIMER14_CH0, TSI_G5_IO3
PB15	36	I/O	5VT	Default: PB15 Alternate: SPI0_MOSI(3), SPI1_MOSI(5), TIMER0_CH2_ON, TIMER14_CH0_ON, TIMER14_CH1 Additional: RTC_REFIN, WKUP6
PC6	37	I/O	5VT	Default: PC6 Alternate: TIMER2_CH0, I2S0_MCK
PC7	38	I/O	5VT	Default: PC7 Alternate: TIMER2_CH1
PC8	39	I/O	5VT	Default: PC8 Alternate: TIMER2_CH2
PC9	40	I/O	5VT	Default: PC9 Alternate: TIMER2_CH3
PA8	41	I/O	5VT	Default: PA8 Alternate: USART0_CK, TIMER0_CH0, CK_OUT, USART1_TX(4), EVENTOUT,USBFS_SOF,CTC_SYNC

GD32F350Rx LQFP64				
Pin Name	**Pins**	**Pin Type(1)**	**I/O Level(2)**	**Functions description**
PA9	42	I/O	5VT	Default: PA9 Alternate: USART0_TX, TIMER0_CH1, TIMER14_BRKIN, TSI_G3_IO0, I2C0_SCL,USBFS_VBUS
PA10	43	I/O	5VT	Default: PA10 Alternate: USART0_RX, TIMER0_CH2, TIMER16_BRKIN, TSI_G3_IO1, I2C0_SDA, USBFS_ID
PA11	44	I/O	5VT	Default: PA11 Alternate: USART0_CTS, TIMER0_CH3, CMP0_OUT, TSI_G3_IO2, EVENTOUT, SPI1_IO2(5) Additional: USBFS_DM
PA12	45	I/O	5VT	Default: PA12 Alternate: USART0_RTS, TIMER0_ETI, CMP1_OUT, TSI_G3_IO3, EVENTOUT, SPI1_IO3(5) Additional: USBFS_DP
PA13	46	I/O	5VT	Default: PA13 Alternate: IFRP_OUT, SWDIO, SPI1_MISO(5)
PF6	47	I/O	5VT	Default: PF6 Alternate: I2C0_SCL(3), I2C1_SCL(5)
PF7	48	I/O	5VT	Default: PF7 Alternate: I2C0_SDA(3), I2C1_SDA(5)
PA14	49	I/O	5VT	Default: PA14 Alternate: USART0_TX(3), USART1_TX(4), SWCLK, SPI1_MOSI(5)
PA15	50	I/O	5VT	Default: PA15 Alternate: SPI0_NSS, I2S0_WS, USART0_RX(3), USART1_RX(4), TIMER1_CH0, TIMER1_ETI, SPI1_NSS(5), EVENTOUT
PC10	51	I/O	5VT	Default: PC10
PC11	52	I/O	5VT	Default: PC11
PC12	53	I/O	5VT	Default: PC12
PD2	54	I/O	5VT	Default: PD2 Alternate: TIMER2_ETI
PB3	55	I/O	5VT	Default: PB3 Alternate: SPI0_SCK, I2S0_CK, TIMER1_CH1, TSI_G4_IO0, EVENTOUT
PB4	56	I/O	5VT	Default: PB4 Alternate: SPI0_MISO,I2S0_MCK, TIMER2_CH0, TSI_G4_IO1, EVENTOUT
PB5	57	I/O	5VT	Default: PB5 Alternate: SPI0_MOSI,I2S0_SD, I2C0_SMBA, TIMER15_BRKIN, TIMER2_CH1 Additional:WKUP5
PB6	58	I/O	5VT	Default: PB6

GD32F350Rx LQFP64				
Pin Name	**Pins**	**Pin Type(1)**	**I/O Level(2)**	**Functions description**
				Alternate: I2C0_SCL, USART0_TX, TIMER15_CH0_ON, TSI_G4_IO2
PB7	59	I/O	5VT	Default: PB7 Alternate:I2C0_SDA,USART0_RX,TIMER16_CH0_ON, TSI_G4_IO3
BOOT0	60	I		Default: BOOT0
PB8	61	I/O	5VT	Default: PB8 Alternate: I2C0_SCL, CEC, TIMER15_CH0, TSITG
PB9	62	I/O	5VT	Default: PB9 Alternate: I2C0_SDA, IFRP_OUT, TIMER16_CH0, EVENTOUT, I2S0_MCK
V_{SS}	63	P		Default: V_{SS}
V_{DD}	64	P		Default: V_{DD}

Notes:

(1) Type: I = input, O = output, P = power.

(2) I/O Level: 5VT = 5 V tolerant.

(3) Functions are available on GD32F350R4 devices only.

(4) Functions are available on GD32F350RB/8/6 devices.

(5) Functions are available on GD32F350RB/8 devices.

2.6.2 GD32F350Cx LQFP48 pin definitions

Table 2-4. GD32F350Cx LQFP48 pin definitions

GD32F350Cx LQFP48				
Pin Name	**Pins**	**Pin Type(1)**	**I/O Level(2)**	**Functions description**
V_{BAT}	1	P		Default: V_{BAT}
PC13-TAMPER-RTC	2	I/O		Default: PC13 Additional: RTC_TAMP0, RTC_TS, RTC_OUT, WKUP1
PC14-OSC32IN	3	I/O		Default: PC14 Additional: OSC32IN
PC15-OSC32OUT	4	I/O		Default: PC15 Additional: OSC32OUT
PF0-OSCIN	5	I/O	5VT	Default: PF0 Alternate: CTC_SYNC Additional: OSCIN
PF1-OSCOUT	6	I/O	5VT	Default: PF1 Additional: OSCOUT
NRST	7	I/O		Default: NRST
V_{SSA}	8	P		Default: V_{SSA}

GD32F350Cx LQFP48				
Pin Name	**Pins**	**Pin Type(1)**	**I/O Level(2)**	**Functions description**
V_{DDA}	9	P		Default: V_{DDA}
PA0-WKUP	10	I/O		Default: PA0 Alternate: USART0_CTS(3), USART1_CTS(4), TIMER1_CH0, TIMER1_ETI, CMP0_OUT, TSI_G0_IO0, I2C1_SCL(5) Additional: ADC_IN0, CMP0_IM6, RTC_TAMP1, WKUP0
PA1	11	I/O		Default: PA1 Alternate: USART0_RTS(3), USART1_RTS(4), TIMER1_CH1, TSI_G0_IO1, I2C1_SDA(5), EVENTOUT Additional: ADC_IN1, CMP0_IP
PA2	12	I/O		Default: PA2 Alternate: USART0_TX(3), USART1_TX(4), TIMER1_CH2, TIMER14_CH0 , CMP1_OUT,TSI_G0_IO2 Additional: ADC_IN2, CMP1_IM6
PA3	13	I/O		Default: PA3 Alternate: USART0_RX(3), USART1_RX(4), TIMER1_CH3, TIMER14_CH1, TSI_G0_IO3 Additional: ADC_IN3, CMP1_IP
PA4	14	I/O		Default: PA4 Alternate: SPI0_NSS, I2S0_WS, USART0_CK(3), USART1_CK(4), TIMER13_CH0, TSI_G1_IO0, SPI1_NSS(5) Additional: ADC_IN4, CMP0_IM4, CMP1_IM4, DAC0_OUT0
PA5	15	I/O		Default: PA5 Alternate: SPI0_SCK, I2S0_CK, CEC, TIMER1_CH0, TIMER1_ETI, TSI_G1_IO1 Additional: ADC_IN5, CMP0_IM5, CMP1_IM5
PA6	16	I/O		Default: PA6 Alternate: SPI0_MISO, I2S0_MCK, TIMER2_CH0, TIMER0_BRKIN, TIMER15_CH0, CMP0_OUT, TSI_G1_IO2, EVENTOUT Additional: ADC_IN6
PA7	17	I/O		Default: PA7 Alternate: SPI0_MOSI, I2S0_SD, TIMER2_CH1, TIMER13_CH0, TIMER0_CH0_ON, TIMER16_CH0, CMP1_OUT, TSI_G1_IO3, EVENTOUT Additional: ADC_IN7
PB0	18	I/O		Default: PB0 Alternate: TIMER2_CH2, TIMER0_CH1_ON, TSI_G2_IO1, USART1_RX(4), EVENTOUT Additional: ADC_IN8

GD32F350Cx LQFP48				
Pin Name	**Pins**	**Pin Type(1)**	**I/O Level(2)**	**Functions description**
PB1	19	I/O		Default: PB1 Alternate: TIMER2_CH3, TIMER13_CH0, TIMER0_CH2_ON, TSI_G2_IO2, SPI1_SCK(5) Additional: ADC_IN9
PB2	20	I/O	5VT	Default: PB2 Alternate: TSI_G2_IO3
PB10	21	I/O	5VT	Default: PB10 Alternate: I2C0_SCL(3),I2C1_SCL(5), CEC, TIMER1_CH2, TSITG, SPI1_IO2(5)
PB11	22	I/O	5VT	Default: PB11 Alternate: I2C0_SDA(3),I2C1_SDA(5), TIMER1_CH3, TSI_G5_IO0, EVENTOUT, SPI1_IO3(5)
V_{SS}	23	P		Default: V_{SS}
V_{DD}	24	P		Default: V_{DD}
PB12	25	I/O	5VT	Default: PB12 Alternate: SPI0_NSS(3), SPI1_NSS(5), TIMER0_BRKIN, TSI_G5_IO1, I2C1_SMBA(5), EVENTOUT
PB13	26	I/O	5VT	Default: PB13 Alternate: SPI0_SCK(3), SPI1_SCK(5), TIMER0_CH0_ON, TSI_G5_IO2
PB14	27	I/O	5VT	Default: PB14 Alternate: SPI0_MISO(3), SPI1_MISO(5), TIMER0_CH1_ON, TIMER14_CH0, TSI_G5_IO3
PB15	28	I/O	5VT	Default: PB15 Alternate: SPI0_MOSI(3), SPI1_MOSI(5), TIMER0_CH2_ON, TIMER14_CH0_ON, TIMER14_CH1 Additional: RTC_REFIN, WKUP6
PA8	29	I/O	5VT	Default: PA8 Alternate: USART0_CK, TIMER0_CH0, CK_OUT, USART1_TX(4), EVENTOUT,USBFS_SOF,CTC_SYNC
PA9	30	I/O	5VT	Default: PA9 Alternate: USART0_TX, TIMER0_CH1, TIMER14_BRKIN, TSI_G3_IO0, I2C0_SCL,USBFS_VBUS
PA10	31	I/O	5VT	Default: PA10 Alternate: USART0_RX, TIMER0_CH2, TIMER16_BRKIN, TSI_G3_IO1, I2C0_SDA, USBFS_ID
PA11	32	I/O	5VT	Default: PA11 Alternate: USART0_CTS, TIMER0_CH3, CMP0_OUT, TSI_G3_IO2, EVENTOUT, SPI1_IO2(5) Additional: USBFS_DM
PA12	33	I/O	5VT	Default: PA12

GD32F350Cx LQFP48				
Pin Name	**Pins**	**Pin Type(1)**	**I/O Level(2)**	**Functions description**
				Alternate: USART0_RTS, TIMER0_ETI, CMP1_OUT, TSI_G3_IO3, EVENTOUT, SPI1_IO3(5) Additional: USBFS_DP
PA13	34	I/O	5VT	Default: PA13 Alternate: IFRP_OUT, SWDIO, SPI1_MISO(5)
PF6	35	I/O	5VT	Default: PF6 Alternate: I2C0_SCL(3), I2C1_SCL(5)
PF7	36	I/O	5VT	Default: PF7 Alternate: I2C0_SDA(3), I2C1_SDA(5)
PA14	37	I/O	5VT	Default: PA14 Alternate: USART0_TX(3), USART1_TX(4), SWCLK, SPI1_MOSI(5)
PA15	38	I/O	5VT	Default: PA15 Alternate: SPI0_NSS, I2S0_WS, USART0_RX(3), USART1_RX(4), TIMER1_CH0, TIMER1_ETI, SPI1_NSS(5), EVENTOUT
PB3	39	I/O	5VT	Default: PB3 Alternate: SPI0_SCK, I2S0_CK, TIMER1_CH1, TSI_G4_IO0, EVENTOUT
PB4	40	I/O	5VT	Default: PB4 Alternate: SPI0_MISO,I2S0_MCK, TIMER2_CH0, TSI_G4_IO1, EVENTOUT
PB5	41	I/O	5VT	Default: PB5 Alternate: SPI0_MOSI,I2S0_SD, I2C0_SMBA, TIMER15_BRKIN, TIMER2_CH1 Additional:WKUP5
PB6	42	I/O	5VT	Default: PB6 Alternate: I2C0_SCL, USART0_TX, TIMER15_CH0_ON, TSI_G4_IO2
PB7	43	I/O	5VT	Default: PB7 Alternate:I2C0_SDA,USART0_RX,TIMER16_CH0_ON, TSI_G4_IO3
BOOT0	44	I		Default: BOOT0
PB8	45	I/O	5VT	Default: PB8 Alternate: I2C0_SCL, CEC, TIMER15_CH0, TSITG
PB9	46	I/O	5VT	Default: PB9 Alternate: I2C0_SDA, IFRP_OUT, TIMER16_CH0, EVENTOUT, I2S0_MCK
V_{SS}	47	P		Default: V_{SS}
V_{DD}	48	P		Default: V_{DD}

Notes:

(1) Type: I = input, O = output, P = power.

(2) I/O Level: 5VT = 5 V tolerant.

(3) Functions are available on GD32F350C4 devices only.
(4) Functions are available on GD32F350CB/8/6 devices.
(5) Functions are available on GD32F350CB/8 devices.

2.6.3 GD32F350Kx QFN32 pin definitions

Table 2-5. GD32F350Kx QFN32 pin definitions

GD32F350Kx QFN32				
Pin Name	**Pins**	**Pin Type(1)**	**I/O Level(2)**	**Functions description**
PF0-OSCIN	2	I/O	5VT	Default: PF0 Alternate: CTC_SYNC Additional: OSCIN
PF1-OSCOUT	3	I/O	5VT	Default: PF1 Additional: OSCOUT
NRST	4	I/O		Default: NRST
V_{DDA}	5	P		Default: V_{DDA}
PA0-WKUP	6	I/O		Default: PA0 Alternate: USART0_CTS(3), USART1_CTS(4), TIMER1_CH0, TIMER1_ETI, CMP0_OUT, TSI_G0_IO0, I2C1_SCL(5) Additional: ADC_IN0, CMP0_IM6, RTC_TAMP1, WKUP0
PA1	7	I/O		Default: PA1 Alternate: USART0_RTS(3), USART1_RTS(4), TIMER1_CH1, TSI_G0_IO1, I2C1_SDA(5), EVENTOUT Additional: ADC_IN1, CMP0_IP
PA2	8	I/O		Default: PA2 Alternate: USART0_TX(3), USART1_TX(4), TIMER1_CH2, TIMER14_CH0 , CMP1_OUT,TSI_G0_IO2 Additional: ADC_IN2, CMP1_IM6
PA3	9	I/O		Default: PA3 Alternate: USART0_RX(3), USART1_RX(4), TIMER1_CH3, TIMER14_CH1, TSI_G0_IO3 Additional: ADC_IN3, CMP1_IP
PA4	10	I/O		Default: PA4 Alternate: SPI0_NSS, I2S0_WS, USART0_CK(3), USART1_CK(4), TIMER13_CH0, TSI_G1_IO0, SPI1_NSS(5) Additional: ADC_IN4, CMP0_IM4, CMP1_IM4, DAC0_OUT0
PA5	11	I/O		Default: PA5 Alternate: SPI0_SCK, I2S0_CK, CEC, TIMER1_CH0, TIMER1_ETI, TSI_G1_IO1 Additional: ADC_IN5, CMP0_IM5, CMP1_IM5

GD32F350Kx QFN32				
Pin Name	**Pins**	**Pin Type(1)**	**I/O Level(2)**	**Functions description**
PA6	12	I/O		Default: PA6 Alternate: SPI0_MISO, I2S0_MCK, TIMER2_CH0, TIMER0_BRKIN, TIMER15_CH0, CMP0_OUT, TSI_G1_IO2, EVENTOUT Additional: ADC_IN6
PA7	13	I/O		Default: PA7 Alternate: SPI0_MOSI, I2S0_SD, TIMER2_CH1, TIMER13_CH0, TIMER0_CH0_ON, TIMER16_CH0, CMP1_OUT, TSI_G1_IO3, EVENTOUT Additional: ADC_IN7
PB0	14	I/O		Default: PB0 Alternate: TIMER2_CH2, TIMER0_CH1_ON, TSI_G2_IO1, USART1_RX(4), EVENTOUT Additional: ADC_IN8
PB1	15	I/O		Default: PB1 Alternate: TIMER2_CH3, TIMER13_CH0, TIMER0_CH2_ON, TSI_G2_IO2, SPI1_SCK(5) Additional: ADC_IN9
PB2	16	I/O	5VT	Default: PB2 Alternate: TSI_G2_IO3
V_{DD}	17	P		Default: V_{DD}
PA8	18	I/O	5VT	Default: PA8 Alternate: USART0_CK, TIMER0_CH0, CK_OUT, USART1_TX(4), EVENTOUT,USBFS_SOF,CTC_SYNC
PA9	19	I/O	5VT	Default: PA9 Alternate: USART0_TX, TIMER0_CH1, TIMER14_BRKIN, TSI_G3_IO0, I2C0_SCL,USBFS_VBUS
PA10	20	I/O	5VT	Default: PA10 Alternate: USART0_RX, TIMER0_CH2, TIMER16_BRKIN, TSI_G3_IO1, I2C0_SDA, USBFS_ID
PA11	21	I/O	5VT	Default: PA11 Alternate: USART0_CTS, TIMER0_CH3, CMP0_OUT, TSI_G3_IO2, EVENTOUT, SPI1_IO2(5) Additional: USBFS_DM
PA12	22	I/O	5VT	Default: PA12 Alternate: USART0_RTS, TIMER0_ETI, CMP1_OUT, TSI_G3_IO3, EVENTOUT, SPI1_IO3(5) Additional: USBFS_DP
PA13	23	I/O	5VT	Default: PA13 Alternate: IFRP_OUT, SWDIO, SPI1_MISO(5)
PA14	24	I/O	5VT	Default: PA14 Alternate: USART0_TX(3), USART1_TX(4), SWCLK, SPI1_MOSI(5)

GD32F350Kx QFN32				
Pin Name	**Pins**	**Pin Type(1)**	**I/O Level(2)**	**Functions description**
PA15	25	I/O	5VT	Default: PA15 Alternate: SPI0_NSS, I2S0_WS, USART0_RX(3), USART1_RX(4), TIMER1_CH0, TIMER1_ETI, SPI1_NSS(5), EVENTOUT
PB3	26	I/O	5VT	Default: PB3 Alternate: SPI0_SCK, I2S0_CK, TIMER1_CH1, TSI_G4_IO0, EVENTOUT
PB4	27	I/O	5VT	Default: PB4 Alternate: SPI0_MISO,I2S0_MCK, TIMER2_CH0, TSI_G4_IO1, EVENTOUT
PB5	28	I/O	5VT	Default: PB5 Alternate: SPI0_MOSI, I2S0_SD, I2C0_SMBA, TIMER15_BRKIN, TIMER2_CH1 Additional:WKUP5
PB6	29	I/O	5VT	Default: PB6 Alternate: I2C0_SCL, USART0_TX, TIMER15_CH0_ON, TSI_G4_IO2
PB7	30	I/O	5VT	Default: PB7 Alternate:I2C0_SDA,USART0_RX,TIMER16_CH0_ON, TSI_G4_IO3
BOOT0	31	I		Default: BOOT0
PB8	32	I/O	5VT	Default: PB8 Alternate: I2C0_SCL, CEC, TIMER15_CH0, TSITG
V_{DD}	1	P		Default: V_{DD}

Notes:

(1) Type: I = input, O = output, P = power.

(2) I/O Level: 5VT = 5 V tolerant.

(3) Functions are available on GD32F350K4 devices only.

(4) Functions are available on GD32F350KB/8/6 devices.

(5) Functions are available on GD32F350KB/8 devices.

2.6.4 GD32F350Gx QFN28 pin definitions

Table 2-6. GD32F350Gx QFN28 pin definitions

GD32F350Gx QFN28				
Pin Name	**Pins**	**Pin Type(1)**	**I/O Level(2)**	**Functions description**
PF0-OSCIN	2	I/O	5VT	Default: PF0 Alternate: CTC_SYNC Additional: OSCIN
PF1-OSCOUT	3	I/O	5VT	Default: PF1 Additional: OSCOUT

GD32F350Gx QFN28				
Pin Name	**Pins**	**Pin Type(1)**	**I/O Level(2)**	**Functions description**
NRST	4	I/O		Default: NRST
V_{DDA}	5	P		Default: V_{DDA}
PA0-WKUP	6	I/O		Default: PA0 Alternate: USART0_CTS(3), USART1_CTS(4), TIMER1_CH0, TIMER1_ETI, CMP0_OUT, TSI_G0_IO0, I2C1_SCL(5) Additional: ADC_IN0, CMP0_IM6, RTC_TAMP1, WKUP0
PA1	7	I/O		Default: PA1 Alternate: USART0_RTS(3), USART1_RTS(4), TIMER1_CH1, TSI_G0_IO1, I2C1_SDA(5), EVENTOUT Additional: ADC_IN1, CMP0_IP
PA2	8	I/O		Default: PA2 Alternate: USART0_TX(3), USART1_TX(4), TIMER1_CH2, TIMER14_CH0 , CMP1_OUT,TSI_G0_IO2 Additional: ADC_IN2, CMP1_IM6
PA3	9	I/O		Default: PA3 Alternate: USART0_RX(3), USART1_RX(4), TIMER1_CH3, TIMER14_CH1, TSI_G0_IO3 Additional: ADC_IN3, CMP1_IP
PA4	10	I/O		Default: PA4 Alternate: SPI0_NSS, I2S0_WS, USART0_CK(3), USART1_CK(4), TIMER13_CH0, TSI_G1_IO0, SPI1_NSS(5) Additional: ADC_IN4, CMP0_IM4, CMP1_IM4, DAC0_OUT0
PA5	11	I/O		Default: PA5 Alternate: SPI0_SCK, I2S0_CK, CEC, TIMER1_CH0, TIMER1_ETI, TSI_G1_IO1 Additional: ADC_IN5, CMP0_IM5, CMP1_IM5
PA6	12	I/O		Default: PA6 Alternate: SPI0_MISO, I2S0_MCK, TIMER2_CH0, TIMER0_BRKIN, TIMER15_CH0, CMP0_OUT, TSI_G1_IO2, EVENTOUT Additional: ADC_IN6
PA7	13	I/O		Default: PA7 Alternate: SPI0_MOSI, I2S0_SD, TIMER2_CH1, TIMER13_CH0, TIMER0_CH0_ON, TIMER16_CH0, CMP1_OUT, TSI_G1_IO3, EVENTOUT Additional: ADC_IN7
PB0	14	I/O		Default: PB0 Alternate: TIMER2_CH2, TIMER0_CH1_ON, TSI_G2_IO1, USART1_RX(4), EVENTOUT

GD32F350Gx QFN28				
Pin Name	**Pins**	**Pin Type(1)**	**I/O Level(2)**	**Functions description**
				Additional: ADC_IN8
PB1	15	I/O		Default: PB1 Alternate: TIMER2_CH3, TIMER13_CH0, TIMER0_CH2_ON, TSI_G2_IO2, SPI1_SCK(5) Additional: ADC_IN9
V_{DD}	16	P		Default: V_{DD}
PA9	17	I/O	5VT	Default: PA9 Alternate: USART0_TX, TIMER0_CH1, TIMER14_BRKIN, TSI_G3_IO0, I2C0_SCL,USBFS_VBUS
PA10	18	I/O	5VT	Default: PA10 Alternate: USART0_RX, TIMER0_CH2, TIMER16_BRKIN, TSI_G3_IO1, I2C0_SDA, USBFS_ID
PA11	19	I/O	5VT	Default: PA11 Alternate: USART0_CTS, TIMER0_CH3, CMP0_OUT, TSI_G3_IO2, EVENTOUT, SPI1_IO2(5) Additional: USBFS_DM
PA12	20	I/O	5VT	Default: PA12 Alternate: USART0_RTS, TIMER0_ETI, CMP1_OUT, TSI_G3_IO3, EVENTOUT, SPI1_IO3(5) Additional: USBFS_DP
PA13	21	I/O	5VT	Default: PA13 Alternate: IFRP_OUT, SWDIO, SPI1_MISO(5)
PA14	22	I/O	5VT	Default: PA14 Alternate: USART0_TX(3), USART1_TX(4), SWCLK, SPI1_MOSI(5)
PA15	23	I/O	5VT	Default: PA15 Alternate: SPI0_NSS, I2S0_WS, USART0_RX(3), USART1_RX(4), TIMER1_CH0, TIMER1_ETI, SPI1_NSS(5), EVENTOUT
PB3	24	I/O	5VT	Default: PB3 Alternate: SPI0_SCK, I2S0_CK, TIMER1_CH1, TSI_G4_IO0, EVENTOUT
PB4	25	I/O	5VT	Default: PB4 Alternate: SPI0_MISO,I2S0_MCK, TIMER2_CH0, TSI_G4_IO1, EVENTOUT
PB5	26	I/O	5VT	Default: PB5 Alternate: SPI0_MOSI,I2S0_SD, I2C0_SMBA, TIMER15_BRKIN, TIMER2_CH1 Additional:WKUP5
PB6	27	I/O	5VT	Default: PB6 Alternate: I2C0_SCL, USART0_TX, TIMER15_CH0_ON, TSI_G4_IO2
PB7	28	I/O	5VT	Default: PB7

GD32F350Gx QFN28				
Pin Name	**Pins**	**Pin Type(1)**	**I/O Level(2)**	**Functions description**
				Alternate:I2C0_SDA,USART0_RX,TIMER16_CH0_ON, TSI_G4_IO3
BOOT0	1	I		Default: BOOT0

Notes:

(1) Type: I = input, O = output, P = power.

(2) I/O Level: 5VT = 5 V tolerant.

(3) Functions are available on GD32F350G4 devices only.

(4) Functions are available on GD32F350G8/6 devices.

(5) Functions are available on GD32F350G8 devices

2.6.5 GD32F350xx pin alternate functions

Table 2-7. Port A alternate functions summary

Pin Name	AF0	AF1	AF2	AF3	AF4	AF5	AF6	AF7
PA0		USART0_CTS(1) USART1_CTS(2)	TIMER1_CH0, TIMER1_ETI	TSI_G0_IO0	I2C1_SCL(3)			CMP0_OUT
PA1	EVENTOUT	USART0_RTS(1) USART1_RTS(2)	TIMER1_CH1	TSI_G0_IO1	I2C1_SDA(3)			
PA2	TIMER14_CH0	USART0_TX(1) USART1_TX(2)	TIMER1_CH2	TSI_G0_IO2				CMP1_OUT
PA3	TIMER14_CH1	USART0_RX(1) USART1_RX(2)	TIMER1_CH3	TSI_G0_IO3				
PA4	SPI0_NSS / I2S0_WS	USART0_CK(1) USART1_CK(2)		TSI_G1_IO0	TIMER13_CH0		SPI1_NSS(3)	
PA5	SPI0_SCK / I2S0_CK	CEC	TIMER1_CH0, TIMER1_ETI	TSI_G1_IO1				
PA6	SPI0_MISO/I2S0_MCK	TIMER2_CH0	TIMER0_BRKIN	TSI_G1_IO2		TIMER15_CH0	EVENTOUT	CMP0_OUT
PA7	SPI0_MOSI/ I2S0_SD	TIMER2_CH1	TIMER0_CH0_ON	TSI_G1_IO3	TIMER13_CH0	TIMER16_CH0	EVENTOUT	CMP1_OUT
PA8	CK_OUT	USART0_CK	TIMER0_CH0	EVENTOUT	USART1_TX(2)	USBFS_SOF	CTC_SYNC	
PA9	TIMER14_BRKIN	USART0_TX	TIMER0_CH1	TSI_G3_IO0	I2C0_SCL	USBFS_VBUS		
PA10	TIMER16_BRKIN	USART0_RX	TIMER0_CH2	TSI_G3_IO1	I2C0_SDA	USBFS_ID		
PA11	EVENTOUT	USART0_CTS	TIMER0_CH3	TSI_G3_IO2			SPI1_IO2(3)	CMP0_OUT
PA12	EVENTOUT	USART0_RTS	TIMER0_ETI	TSI_G3_IO3			SPI1_IO3(3)	CMP1_OUT
PA13	SWDIO	IFRP_OUT					SPI1_MISO(3)	
PA14	SWCLK	USART0_TX(1) USART1_TX(2)					SPI1_MOSI(3)	
PA15	SPI0_NSS / I2S0_WS	USART0_RX(1) USART1_RX(2)	TIMER1_CH0, TIMER1_ETI	EVENTOUT			SPI1_NSS(3)	

Table 2-8. Port B alternate functions summary

Pin Name	AF0	AF1	AF2	AF3	AF4	AF5	AF6
PB0	EVENTOUT	TIMER2_CH2	TIMER0_CH1_ON	TSI_G2_IO1	USART1_RX		
PB1	TIMER13_CH0	TIMER2_CH3	TIMER0_CH2_ON	TSI_G2_IO2			SPI1_SCK(3)
PB2				TSI_G2_IO3			
PB3	SPI0_SCK / I2S0_CK	EVENTOUT	TIMER1_CH1	TSI_G4_IO0			
PB4	SPI0_MISO / I2S0_MCK	TIMER2_CH0	EVENTOUT	TSI_G4_IO1			
PB5	SPI0_MOSI / I2S0_SD	TIMER2_CH1	TIMER15_BRKIN	I2C0_SMBA			
PB6	USART0_TX	I2C0_SCL	TIMER15_CH0_ON	TSI_G4_IO2			
PB7	USART0_RX	I2C0_SDA	TIMER16_CH0_ON	TSI_G4_IO3			
PB8	CEC	I2C0_SCL	TIMER15_CH0	TSITG			
PB9	IFRP_OUT	I2C0_SDA	TIMER16_CH0	EVENTOUT		I2S0_MCK	
PB10	CEC	I2C0_SCL(1), I2C1_SCL(3)	TIMER1_CH2	TSITG			SPI1_IO2(3)
PB11	EVENTOUT	I2C0_SDA(1), I2C1_SDA(3)	TIMER1_CH3	TSI_G5_IO0			SPI1_IO3(3)
PB12	SPI0_NSS(1) SPI1_NSS(3)	EVENTOUT	TIMER0_BRKIN	TSI_G5_IO1	I2C1_SMBA(3)		
PB13	SPI0_SCK(1) SPI1_SCK(3)		TIMER0_CH0_ON	TSI_G5_IO2			
PB14	SPI0_MISO(1) SPI1_MISO(3)	TIMER14_CH0	TIMER0_CH1_ON	TSI_G5_IO3			
PB15	SPI0_MOSI(1) SPI1_MOSI(3)	TIMER14_CH1	TIMER0_CH2_ON	TIMER14_CH0_ON			

Table 2-9. Port C alternate functions summary

Pin Name	AF0	AF1	AF2	AF3	AF4	AF5	AF6
PC0	EVENTOUT						
PC1	EVENTOUT						
PC2	EVENTOUT						
PC3	EVENTOUT						
PC4	EVENTOUT						
PC5	TSI_G2_IO0						
PC6	TIMER2_CH0		I2S0_MCK				
PC7	TIMER2_CH1						
PC8	TIMER2_CH2						
PC9	TIMER2_CH3						
PC10							
PC11							
PC12							
PC13							
PC14							
PC15							

Table 2-10. Port D alternate functions summary

Pin Name	AF0	AF1	AF2	AF3	AF4	AF5	AF6
PD0							
PD1							
PD2	TIMER2_ETI						
PD3							
PD4							
PD5							
PD6							
PD7							
PD8							
PD9							
PD10							
PD11							
PD12							
PD13							
PD14							
PD15							

Table 2-11. Port F alternate functions summary

Pin Name	AF0	AF1	AF2	AF3	AF4	AF5	AF6
PF0	CTC_SYNC						
PF1							
PF2							
PF3							
PF4	EVENTOUT						
PF5	EVENTOUT						
PF6	I2C0_SCL(1) I2C1_SCL(3)						
PF7	I2C0_SDA(1) I2C1_SDA(3)						
PF8							
PF9							
PF10							
PF11							
PF12							
PF13							
PF14							
PF15							

Notes:

(1) Functions are available on GD32F350x4 devices only.

(2) Functions are available on GD32F350xB/8/6 devices.

(3) Functions are available on GD32F350xB/8 devices.

3 Functional description

3.1 Arm® Cortex®-M4 core

The Arm® Cortex®-M4 processor is a high performance embedded processor with DSP instructions which allow efficient signal processing and complex algorithm execution. It brings an efficient, easy-to-use blend of control and signal processing capabilities to meet the digital signal control markets demand. The processor is highly configurable enabling a wide range of implementations from those requiring memory protection and powerful trace technology to cost sensitive devices requiring minimal area, while delivering outstanding computational performance and an advanced system response to interrupts.

32-bit Arm® Cortex®-M4 processor core:

- Up to 108 MHz operation frequency
- Single-cycle multiplication and hardware divider
- Floating Point Unit (FPU)
- Integrated DSP instructions
- Integrated Nested Vectored Interrupt Controller (NVIC)
- 24-bit SysTick timer

The Cortex®-M4 processor is based on the Armv7-M architecture and supports both Thumb and Thumb-2 instruction sets. Some system peripherals listed below are also provided by Cortex®-M4:

- Internal Bus Matrix connected with ICode bus, DCode bus, system bus, Private Peripheral Bus (PPB) and debug accesses (AHB-AP)
- Nested Vectored Interrupt Controller (NVIC)
- Flash Patch and Breakpoint (FPB)
- Data Watchpoint and Trace (DWT)
- Instrument Trace Macrocell (ITM)
- Serial Wire Debug Port (SW-DP)
- Trace Port Interface Unit (TPIU)

3.2 On-chip memory

- Up to 128 Kbytes of Flash memory
- The region of the MCU executing instructions without waiting time is up to 64K bytes (in case that Flash size equal to 16K, 32K or 64K, all memory is no waiting time). A long delay when CPU fetches the instructions out of the range.
- Up to 16 Kbytes of SRAM with hardware parity checking

The Arm® Cortex®-M4 processor is structured in Harvard architecture which can use separate buses to fetch instructions and load/store data. 128 Kbytes of inner Flash at most, which

includes code Flash and data Flash is available for storing programs and data, and there is no waiting time within code Flash area when CPU executes instructions. ***Table 2-2. GD32F350xx memory map*** shows the memory map of the GD32F350xx series of devices, including code, SRAM, peripheral, and other pre-defined regions.

3.3 Clock, reset and supply management

- Internal 8 MHz factory-trimmed RC and external 4 to 32 MHz crystal oscillator
- Internal 48 MHz RC oscillator
- Internal 28 MHz RC oscillator
- Internal 40 KHz RC calibrated oscillator and external 32.768 KHz crystal oscillator
- Integrated system clock PLL
- 2.6 to 3.6 V application supply and I/Os
- Supply Supervisor: POR (Power On Reset), PDR (Power Down Reset), and low voltage detector (LVD)

The Clock Control Unit (CCU) provides a range of oscillator and clock functions. These include speed internal RC oscillator and external crystal oscillator, high speed and low speed two types. Several prescalers allow the frequency configuration of the AHB and two APB domains. The maximum frequency of the AHB, APB2 and APB1 domains is 108 MHz/54 MHz/54 MHz. See ***Figure 2-6. GD32F350xx clock tree*** for details on the clock tree.

The Reset Control Unit (RCU) controls three kinds of reset: system reset resets the processor core and peripheral IP components. Power-on reset (POR) and power-down reset (PDR) are always active, and ensures proper operation starting from 2.6 V and down to 1.8V. The device remains in reset mode when V_{DD} is below a specified threshold. The embedded low voltage detector (LVD) monitors the power supply, compares it to the voltage threshold and generates an interrupt as a warning message for leading the MCU into security.

Power supply schemes:

- V_{DD} range: 2.6 to 3.6 V, external power supply for I/Os and the internal regulator. Provided externally through V_{DD} pins.
- V_{SSA}, V_{DDA} range: 2.6 to 3.6 V, external analog power supplies for ADC, reset blocks, RCs and PLL.
- V_{BAT} range: 1.8 to 3.6 V, power supply for RTC, external clock 32 KHz oscillator and backup registers (through power switch) when V_{DD} is not present.

3.4 Boot modes

At startup, boot pins are used to select one of three boot options:

- Boot from main Flash memory (default)
- Boot from system memory
- Boot from on-chip SRAM

In default condition, boot from main Flash memory is selected. The boot loader is located in the internal boot ROM memory (system memory). It is used to reprogram the Flash memory by using USART0 (PA9 and PA10). For GD32F350x4 devices, USART0 (PA2 and PA3) can also be used for boot loader functions. For GD32F350xB/8/6 devices, USART1 (PA14 and PA15) is also available for boot loader functions.

To ensure system reliability and stability, it is recommended not to connect peripherals that may generate interference signals (such as sensor outputs, watchdog chips, buttons, etc.) to the above-mentioned pins during the hardware design stage, in order to avoid affecting the normal function of the Bootloader and causing abnormal outputs to the connected peripherals.

Note: When booting from system memory, the USART RX pins (PA10, PA3, PA15) are in input level detection mode. Therefore, unused USART RX pins (PA10, PA3, PA15) need to be kept at a stable logic level to prevent false triggering.

3.5 Power saving modes

The MCU supports three kinds of power saving modes to achieve even lower power consumption. They are sleep mode, deep-sleep mode, and standby mode. These operating modes reduce the power consumption and allow the application to achieve the best balance between the CPU operating time, speed and power consumption.

- **Sleep mode**
  In sleep mode, only the clock of CPU core is off. All peripherals continue to operate and any interrupt/event can wake up the system.
- **Deep-sleep mode**
  In deep-sleep mode, all clocks in the V_{CORE} domain are off, and all of the high speed crystal oscillator (IRC8M, HXTAL) and PLL are disabled. Only the contents of SRAM and registers are retained. Any interrupt or wakeup event from EXTI lines can wake up the system from the deep-sleep mode including the 16 external lines, the RTC alarm, RTC tamper and timestamp, CMP0/CMP1 output, LVD output, USART wakeup, CEC wakeup and USB wakeup. When exiting the deep-sleep mode, the IRC8M is selected as the system clock.
- **Standby mode**
  In standby mode, the whole V_{CORE} domain is power off, the LDO is shut down, and all of IRC8M, HXTAL and PLL are disabled. The contents of SRAM and registers (except backup registers) are lost. There are four wakeup sources for the standby mode, including the external reset from NRST pin, the RTC alarm, the FWDGT reset, and the rising edge on WKUP pin.

3.6 Analog to digital converter (ADC)

- 12-bit SAR ADC's conversion rate is up to 2.57 MSPS
- 12-bit, 10-bit, 8-bit or 6-bit configurable resolution

- Hardware oversampling ratio adjustable from 2 to 256x improves resolution to 16-bit
- Input voltage range: V_{SSA} to V_{DDA} (2.6 to 3.6 V)
- Temperature sensor

One 12-bit 2.57 MSPS multi-channel ADCs are integrated in the device. It has a total of 19 multiplexed channels: 16 external channels, 1 channel for internal temperature sensor (V_{SENSE}), 1 channel for internal reference voltage (V_{REFINT}) and 1 channel for battery voltage (V_{BAT}). The input voltage range is between V_{SSA} and V_{DDA}. An on-chip hardware oversampling scheme improves performance while off-loading the related computational burden from the CPU. An analog watchdog block can be used to detect the channels, which are required to remain within a specific threshold window. A configurable channel management block can be used to perform conversions in single, continuous, scan or discontinuous mode to support more advanced use.

The ADC can be triggered from the events generated by the general level 0 timers (TIMERx) and the advanced timer (TIMER0) with internal connection. The temperature sensor can be used to generate a voltage that varies linearly with temperature. It is internally connected to the ADC_IN16 input channel which is used to convert the sensor output voltage in a digital value.

3.7 Digital to analog converter (DAC)

- 12-bit DAC converter of independent output channel
- 8-bit or 12-bit mode in conjunction with the DMA controller

The 12-bit buffered DAC channel is used to generate variable analog outputs. The DAC is designed with integrated resistor strings structure. The DAC channels can be triggered by the timer update outputs or EXTI with DMA support. The maximum output value of the DAC is V_{REF+}.

3.8 DMA

- 7 channel DMA controller
- Peripherals supported: Timers, ADC, SPIs, I2Cs, USARTs, DAC and I2S

The flexible general-purpose DMA controllers provide a hardware method of transferring data between peripherals and/or memory without intervention from the CPU, thereby freeing up bandwidth for other system functions. Three types of access method are supported: peripheral to memory, memory to peripheral, memory to memory.

Each channel is connected to fixed hardware DMA requests. The priorities of DMA channel requests are determined by software configuration and hardware channel number. Transfer size of source and destination are independent and configurable.

3.9 General-purpose inputs/outputs (GPIOs)

- Up to 55 fast GPIOs, all mappable on 16 external interrupt lines
- Analog input/output configurable
- Alternate function input/output configurable

There are up to 55 general purpose I/O pins (GPIO) in GD32F350xx, named PA0 ~ PA15 and PB0 ~ PB15, PC0 ~ PC15, PD2, PF0, PF1, PF4-PF7 to implement logic input/output functions. Each of the GPIO ports has related control and configuration registers to satisfy the requirements of specific applications. The external interrupts on the GPIO pins of the device have related control and configuration registers in the Interrupt/event controller (EXTI). The GPIO ports are pin-shared with other alternative functions (AFs) to obtain maximum flexibility on the package pins. Each of the GPIO pins can be configured by software as output (push-pull open-drain), as input (with or without pull-up or pull-down) or as peripheral alternate function. Most of the GPIO pins are shared with digital or analog alternate functions. All GPIOs are high-current capable except for analog inputs.

3.10 Timers and PWM generation

- One 16-bit advanced timer (TIMER0), one 32-bit general timer (TIMER1), five 16-bit general timers (TIMER2, TIMER13 ~ TIMER16), and one 16-bit basic timer (TIMER5)
- Up to 4 independent channels of PWM, output compare or input capture for each general timer and external trigger input
- 16-bit, motor control PWM advanced timer with programmable dead-time generation for output match
- Encoder interface controller with two inputs using quadrature decoder
- 24-bit SysTick timer down counter
- 2 watchdog timers (free watchdog timer and window watchdog timer)

The advanced timer (TIMER0) can be used as a three-phase PWM multiplexed on 6 channels. It has complementary PWM outputs with programmable dead-time generation. It can also be used as a complete general timer. The 4 independent channels can be used for input capture, output compare, PWM generation (edge-aligned or center-aligned mode) and single pulse mode output. If configured as a general 16-bit timer, it has the same functions as the TIMERx timer. It can be synchronized with external signals or to interconnect with other general timers together which have the same architecture and features.

The general timer can be used for a variety of purposes including general time, input signal pulse width measurement or output waveform generation such as a single pulse generation or PWM output, up to 4 independent channels for input capture/output compare. TIMER1 is based on a 32-bit auto-reload up/downcounter and a 16-bit prescaler. TIMER2 is based on a 16-bit auto-reload up/downcounter and a 16-bit prescaler. TIMER13 ~ TIMER16 is based on a 16-bit auto-reload upcounter and a 16-bit prescaler. The general timer also supports an

encoder interface with two inputs using quadrature decoder.

The basic timer, known as TIMER5, is mainly used for DAC trigger generation. They can also be used as a simple 16-bit time base.

The GD32F350xx have two watchdog peripherals, free watchdog and window watchdog. They offer a combination of high safety level, flexibility of use and timing accuracy.

The free watchdog timer includes a 12-bit down-counting counter and an 8-bit prescaler. It is clocked from an independent 40 KHz internal RC and as it operates independently of the main clock, it can operate in deep-sleep and standby modes. It can be used either as a watchdog to reset the device when a problem occurs, or as a free-running timer for application timeout management.

The window watchdog is based on a 7-bit down counter that can be set as free-running. It can be used as a watchdog to reset the device when a problem occurs. It is clocked from the main clock. It has an early wakeup interrupt capability and the counter can be frozen in debug mode.

The SysTick timer is dedicated for OS, but could also be used as a standard down counter. The features are shown below:

- A 24-bit down counter
- Auto reload capability
- Maskable system interrupt generation when the counter reaches 0
- Programmable clock source

3.11 Real time clock (RTC)

- Independent binary-coded decimal (BCD) format timer/counter with five 32-bit backup registers.
- Calendar with subsecond, seconds, minutes, hours, week day, date, year and month automatically correction
- Alarm function with wake up from deep-sleep and standby mode capability
- On-the-fly correction for synchronization with master clock. Digital calibration with 0.954 ppm resolution for compensation of quartz crystal inaccuracy.

The real time clock is an independent timer which provides a set of continuously running counters in backup registers to provide a real calendar function, and provides an alarm interrupt or an expected interrupt. It is not reset by a system or power reset, or when the device wakes up from standby mode. In the RTC unit, there are two prescalers used for implementing the calendar and other functions. One prescaler is a 7-bit asynchronous prescaler and the other is a 15-bit synchronous prescaler.

3.12 Inter-integrated circuit (I2C)

- Up to two I2C bus interfaces can support both master and slave mode with a frequency up to 1 MHz (Fast mode plus)
- Provide arbitration function, optional PEC (packet error checking) generation and checking
- Supports 7-bit and 10-bit addressing mode and general call addressing mode

The I2C interface is an internal circuit allowing communication with an external I2C interface which is an industry standard two-line serial interface used for connection to external hardware. These two serial lines are known as a serial data line (SDA) and a serial clock line (SCL). The I2C module provides different data transfer rates: up to 100 KHz in standard mode, up to 400 KHz in the fast mode and up to 1 MHz in the fast mode plus. The I2C module also has an arbitration detect function to prevent the situation where more than one master attempts to transmit data to the I2C bus at the same time. A CRC-8 calculator is also provided in I2C interface to perform packet error checking for I2C data.

3.13 Serial peripheral interface (SPI)

- Up to two SPI interfaces
- Support both master and slave mode
- Hardware CRC calculation and transmit automatic CRC error checking

The SPI interface uses 4 pins, among which are the serial data input and output lines (MISO & MOSI), the clock line (SCK) and the slave select line (NSS). Both SPIs can be served by the DMA controller. The SPI interface may be used for a variety of purposes, including simplex synchronous transfers on two lines with a possible bidirectional data line or reliable communication using CRC checking.

3.14 Universal synchronous asynchronous receiver transmitter (USART)

- Up to two USARTs with operating frequency up to 6.75 MB/s
- Supports both asynchronous and clocked synchronous serial communication modes
- IrDA SIR encoder and decoder support
- LIN break generation and detection
- ISO 7816-3 compliant smart card interface

The USART (USART0, USART1) are used to translate data between parallel and serial interfaces, provides a flexible full duplex data exchange using synchronous or asynchronous transfer. It is also commonly used for RS-232 standard communication. The USART includes a programmable baud rate generator which is capable of dividing the system clock to produce

a dedicated clock for the USART transmitter and receiver. The USART also supports DMA function for high speed data communication.

3.15 Inter-IC sound (I2S)

- One I2S bus Interfaces with sampling frequency from 8 KHz to 192 KHz, multiplexed with SPI0
- Support either master or slave mode

The Inter-IC sound (I2S) bus provides a standard communication interface for digital audio applications by 3-wire serial lines. GD32F350xx contain an I2S-bus interface that can be operated with 16/32-bit resolution in master or slave mode, pin multiplexed with SPI0. The audio sampling frequency from 8 KHz to 192 KHz is supported with less than 0.5% accuracy error.

3.16 HDMI CEC

- Hardware support Consumer Electronics Control (CEC) protocol (HDMI standard rev1.4)

The CEC protocol provides high-level control functions between the audiovisual products linked with HDMI cables. GD32F350xx contain a HDMI-CEC controller which has an independent clock domain and can wake up the MCU from deep-sleep mode on data reception.

3.17 Universal serial bus full-speed interface (USBFS)

- One USB device/host/OTG full-speed Interface with frequency up to 12 Mbit/s
- Internal 48 MHz oscillator (IRC48M) support crystal-less operation
- Internal main PLL for USB CLK compliantly
- Internal USBFS PHY support

The Universal Serial Bus (USB) is a 4-wire bus with 4 bidirectional endpoints. The device controller enables 12 Mbit/s data exchange with integrated transceivers. Transaction formatting is performed by the hardware, including CRC generation and checking. It supports both host and device modes, as well as OTG mode with Host Negotiation Protocol (HNP) and Session Request Protocol (SRP). The controller contains a full-speed USB PHY internal. For full-speed or low-speed operation, no more external PHY chip is needed. It supports all the four types of transfer (control, bulk, Interrupt and isochronous) defined in USB 2.0 protocol. The required precise 48 MHz clock which can be generated from the internal main PLL (the clock source must use a HXTAL crystal oscillator) or by the internal 48 MHz oscillator (IRC48M) in automatic trimming mode that allows crystal-less operation.

3.18 Touch sensing interface (TSI)

- Charge transfer sequence fully controlled by hardware
- 6 fully parallel groups implemented
- 18 IOs configurable for capacitive sensing Channel Pins and 6 for Sample Pins
- Configurable transfer sequence frequency
- Able to implement the user specific charge transfer sequences
- Sequence end and error flags / configurable interrupts
- Spread spectrum function implemented

Capacitive sensing technology can be used for the detection of a finger (or any conductive object) presence near an electrode. The capacitive variation of the electrode introduced by the finger can be measured by charging and detecting the voltage across the sampling capacitor. GD32F350xx contain a hardware touch sensing interface (TSI) and only requires few external components to operate. The sensing channels are distributed over 6 analog I/O groups including: Group0 (PA0 ~ PA3), Group1 (PA4 ~ PA7), Group2 (PC5, PB0 ~ PB2), Group3 (PA9 ~ PA12), Group4 (PB3, PB4, PB6, PB7) and Group5 (PB11 ~ PB14),

3.19 Comparators (CMP)

- Two fast rail-to-rail low-power comparators with software configurable
- Programmable reference voltage (internal, external I/O or DAC output pin)

Two Comparators (CMP) are implemented within the devices. Both comparators can wake up from deep-sleep mode to generate interrupts and breaks for the timers and also can be combined as a window comparator. The internal voltage reference is also connected to ADC_IN17 input channel of the ADC.

3.20 Debug mode

- Serial wire debug port (SW-DP)

Debug capabilities can be accessed by a debug tool via serial wire.

3.21 Package and operation temperature

- LQFP64 (GD32F350Rx), LQFP48 (GD32F350Cx), QFN32 (GD32F350Kx) and QFN28 (GD32F350Gx)
- Operation temperature range: -40 to +85 °C for grade 6 device (industrial level), and -40 to +105 °C for grade 7 device (industrial level)

4 Electrical characteristics

4.1 Absolute maximum ratings

The maximum ratings are the limits to which the device can be subjected without permanently damaging the device. Note that the device is not guaranteed to operate properly over the maximum ratings. Exposure to the absolute maximum rating conditions for extended periods may affect device reliability.

Table 4-1. Absolute maximum ratings(1) (4)

Symbol	Parameter	Min	Max	Unit
V_{DD}	External voltage range(2)	V_{SS} - 0.3	V_{SS} + 3.6	V
V_{DDA}	External analog supply voltage	V_{SSA} - 0.3	V_{SSA} + 3.6	V
V_{BAT}	External battery supply voltage	V_{SS} - 0.3	V_{SS} + 3.6	V
V_{IN}	Input voltage on 5V tolerant pin(3)	V_{SS} - 0.3	V_{DD} + 3.6	V
	Input voltage on other I/O	V_{SS} - 0.3	3.6	V
$\|\Delta V_{DDx}\|$	Variations between different VDD power pins	-	50	mV
$\|V_{SSX} - V_{SS}\|$	Variations between different ground pins	-	50	mV
I_{IO}	Maximum current for GPIO pin	-	+/-25	mA
T_A	Operating temperature range for grade 6 device	-40	+85	°C
	Operating temperature range for grade 7 device	-40	+105	
P_D	Power dissipation at T_A = 85°C of LQFP64(5)	-	647	mW
	Power dissipation at T_A = 85°C of LQFP48(5)	-	621	
	Power dissipation at T_A = 85°C of QFN32(5)	-	825	
	Power dissipation at T_A = 85°C of QFN28(5)	-	605	
	Power dissipation at T_A = 105°C of LQFP48(5)	-	311	
	Power dissipation at T_A = 105°C of QFN32(5)	-	412	
T_{STG}	Storage temperature range	-65	+150	°C
T_J	Maximum junction temperature	-	125	°C

(1) Guaranteed by design, not tested in production.
(2) All main power and ground pins should be connected to an external power source within the allowable range.
(3) V_{IN} maximum value cannot exceed 5.5 V.
(4) It is recommended that VDD and VDDA are powered by the same source. The maximum difference between VDD and VDDA does not exceed 300 mV during power-up and operation.
(5) For grade 6 devices, the parameter of T_A=85°C, For grade 7 devices, the parameter of T_A=105°C.

4.2 Operating conditions characteristics

Table 4-2. DC operating conditions

Symbol	Parameter	Conditions	Min(1)	Typ	Max(1)	Unit
V_{DD}	Supply voltage	-	2.6	3.3	3.6	V
V_{DDA}	Analog supply voltage	Same as V_{DD}	2.6	3.3	3.6	V

Symbol	Parameter	Conditions	Min(1)	Typ	Max(1)	Unit
V_{BAT}(3)	Battery supply voltage	-	1.8(2)	-	3.6	V
V_{CORE}	Core logic supply voltage powered by internal voltage regulator	LDOVS[1:0] =11	-	1.26	-	V
		LDOVS[1:0] =10	-	1.22	-	
		LDOVS[1:0] =01	-	1.18	-	

(1) Based on characterization, not tested in production.

(2) In the application which V_{BAT} supply the backup domains, if the V_{BAT} voltage drops below the minimum value, when V_{DD} is powered on again, it is necessary to refresh the registers of backup domains and enable LXTAL again.

(3) When both V_{DD} and V_{BAT} are powered simultaneously, it is required that V_{BAT} <= V_{DD} + 0.3 V.

Figure 4-1. Recommended power supply decoupling capacitors(1)

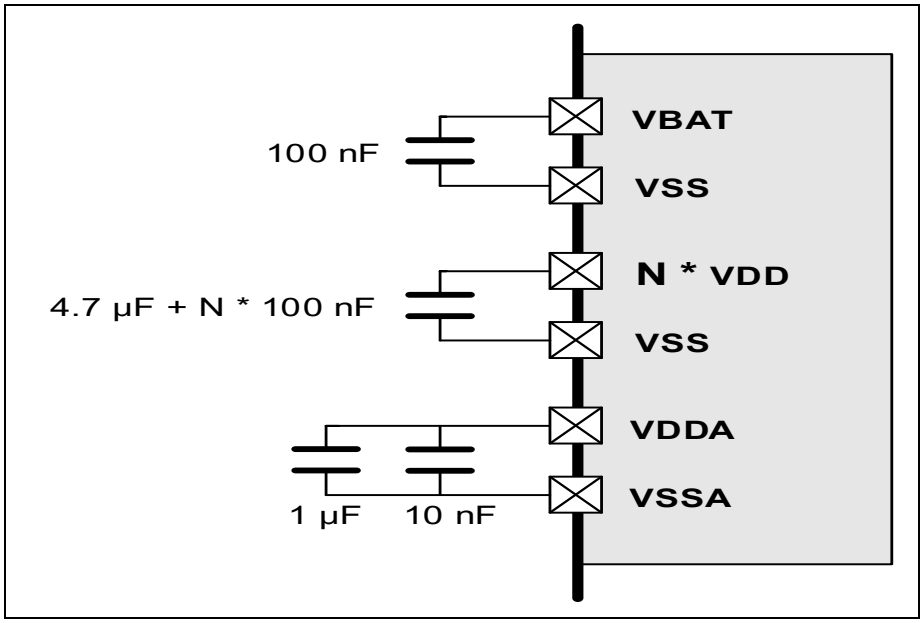

(1) All decoupling capacitors need to be as close as possible to the pins on the PCB board. More details refer to ***AN057 GD32F3x0 Hardware Development Guide***.

Table 4-3. Clock frequency(1)

Symbol	Parameter	Conditions	Min	Max	Unit
f_{HCLK1}	AHB1 clock frequency	-	0	108	MHz
f_{HCLK2}	AHB2 clock frequency	-	0	108	MHz
f_{APB1}	APB1 clock frequency	-	0	54	MHz
f_{APB2}	APB2 clock frequency	-	0	54	MHz

(1) Guaranteed by design, not tested in production.

Table 4-4. Operating conditions at Power up/ Power down(1)

Symbol	Parameter	Conditions	Min	Max	Unit
t_{VDD}	V_{DD} rise time rate	-	0	∞	µs /V
	V_{DD} fall time rate		20	∞	

(1) Guaranteed by design, not tested in production.

Table 4-5. Start-up timings of Operating conditions(1) (2) (3)

Symbol	Parameter	Conditions	Min	Typ	Max	Unit
$t_{start-up}$	Start-up time	Code area in FLASH = 16 KB	7	9	11	ms

Symbol	Parameter	Conditions	Min	Typ	Max	Unit
		Code area in FLASH = 32 KB	15	18	21	
		Code area in FLASH = 64 KB	30	35	40	

(1) Guaranteed by design, not tested in production.

(2) After power-up, the start-up time is the time between the rising edge of NRST high and the main function.

(3) PLL is off.

Table 4-6. Power saving mode wakeup timings characteristics(1)

Symbol	Parameter		Min	Typ	Max	Unit
t_{Sleep}(2)	Wakeup from Sleep mode		-	2.8	-	µs
$t_{Deep-sleep}$(2)	Wakeup from Deep-sleep mode(LDO On)		-	3.6	-	
	Wakeup from Deep-sleep mode(LDO in low power mode)		-	3.6	-	
$t_{Standby}$(3)	Wakeup from Standby mode	Code area in FLASH = 16 KB	7	9	11	ms
		Code area in FLASH = 32 KB	15	18	21	
		Code area in FLASH = 64 KB	30	35	40	

(1) The wakeup time is measured from the wakeup event to the point at which the application code reads the first instruction under the below conditions: V_{DD} = V_{DDA} = 3.3 V, IRC8M = System clock = 8 MHz

(2) Based on characterization, not tested in production.

(3) Guaranteed by design, not tested in production.

4.3 Power consumption

The power measurements specified in the tables represent that code with data executing from on-chip Flash with the following specifications.

Table 4-7. Power consumption characteristics (2)(3)(4)(5)(6)

Symbol	Parameter	Conditions	Min	Typ(1)	Max	Unit
I_{DD} + I_{DDA}	Supply current (Run mode)	V_{DD} = V_{DDA} = 3.3 V, HXTAL = 8 MHz , System clock = 108 MHz, All peripherals enabled	-	21.17	-	mA
		V_{DD} = V_{DDA} = 3.3 V, HXTAL = 8 MHz , System clock = 108 MHz, All peripherals disabled	-	15.58	-	mA
		V_{DD} = V_{DDA} = 3.3 V, HXTAL = 8 MHz , System clock = 96 MHz, All peripherals enabled	-	19.04	-	mA
		V_{DD} = V_{DDA} = 3.3 V, HXTAL = 8 MHz , System Clock = 96 MHz, All peripherals disabled	-	14.06	-	mA
		V_{DD} = V_{DDA} = 3.3 V, HXTAL = 8 MHz , System clock = 84 MHz, All peripherals enabled	-	16.85	-	mA
		V_{DD} = V_{DDA} = 3.3 V, HXTAL = 8 MHz , System Clock = 84 MHz, All peripherals disabled	-	12.47	-	mA

Symbol	Parameter	Conditions	Min	Typ(1)	Max	Unit
		V_{DD} = V_{DDA} = 3.3 V, HXTAL = 8 MHz , System clock = 72 MHz, All peripherals enabled	-	14.64	-	mA
		V_{DD} = V_{DDA} = 3.3 V, HXTAL = 8 MHz , System Clock = 72 MHz, All peripherals disabled	-	10.91	-	mA
		V_{DD} = V_{DDA} = 3.3 V, HXTAL = 8 MHz , System clock = 48 MHz, All peripherals enabled	-	10.29	-	mA
		V_{DD} = V_{DDA} = 3.3 V, HXTAL = 8 MHz , System Clock = 48 MHz, All peripherals disabled	-	7.80	-	mA
		V_{DD} = V_{DDA} = 3.3 V, HXTAL = 8 MHz , System clock = 36 MHz, All peripherals enabled	-	8.10	-	mA
		V_{DD} = V_{DDA} = 3.3 V, HXTAL = 8 MHz , System Clock = 36 MHz, All peripherals disabled	-	6.23	-	mA
		V_{DD} = V_{DDA} = 3.3 V, HXTAL = 8 MHz , System clock = 24 MHz, All peripherals enabled	-	5.91	-	mA
		V_{DD} = V_{DDA} = 3.3 V, HXTAL = 8 MHz , System Clock = 24 MHz, All peripherals disabled	-	4.67	-	mA
		V_{DD} = V_{DDA} = 3.3 V, HXTAL = 8 MHz, System clock = 16 MHz , All peripherals enabled	-	4.45	-	mA
		V_{DD} = V_{DDA} = 3.3 V, HXTAL = 8 MHz , System Clock = 16 MHz, All peripherals disabled	-	3.62	-	mA
		V_{DD} = V_{DDA} = 3.3 V, HXTAL = 8 MHz , System clock = 8 MHz, All peripherals enabled	-	3.01	-	mA
		V_{DD} = V_{DDA} = 3.3 V, HXTAL = 8 MHz , System Clock = 8 MHz, All peripherals disabled	-	2.51	-	mA
		V_{DD} = V_{DDA} = 3.3 V, HXTAL = 4 MHz , System clock = 4 MHz, All peripherals enabled	-	1.11	-	mA
		V_{DD} = V_{DDA} = 3.3 V, HXTAL = 4 MHz , System Clock = 4 MHz, All peripherals disabled	-	0.86	-	mA

Symbol	Parameter	Conditions	Min	Typ(1)	Max	Unit
		V_{DD} = V_{DDA} = 3.3 V, HXTAL = 2 MHz , System clock = 2 MHz, All peripherals enabled	-	0.7	-	mA
		V_{DD} = V_{DDA} = 3.3 V, HXTAL = 2 MHz , System Clock = 2 MHz, All peripherals disabled	-	0.58	-	mA
	Supply current (Sleep mode)	V_{DD} = V_{DDA} = 3.3 V, HXTAL = 8 MHz , CPU clock off, System clock = 108 MHz, All peripherals enabled	-	12.79	-	mA
		V_{DD} = V_{DDA} = 3.3 V, HXTAL = 8 MHz , CPU clock off, System clock = 108 MHz, All peripherals disabled	-	6.40	-	mA
		V_{DD} = V_{DDA} = 3.3 V, HXTAL = 8 MHz , CPU clock off, System clock = 96 MHz, All peripherals enabled	-	11.54	-	mA
		V_{DD} = V_{DDA} = 3.3 V, HXTAL = 8 MHz , CPU clock off, System Clock = 96 MHz, All peripherals disabled	-	5.86	-	mA
		V_{DD} = V_{DDA} = 3.3 V, HXTAL = 8 MHz , CPU clock off, System clock = 84 MHz, All peripherals enabled	-	10.29	-	mA
		V_{DD} = V_{DDA} = 3.3 V, HXTAL = 8 MHz, CPU clock off, System Clock = 84 MHz, All peripherals disabled	-	5.32	-	mA
		V_{DD} = V_{DDA} = 3.3 V, HXTAL = 8 MHz , CPU clock off, System clock = 72 MHz, All peripherals enabled	-	9.03	-	mA
		V_{DD} = V_{DDA} = 3.3 V, HXTAL = 8 MHz , CPU clock off, System Clock = 72 MHz, All peripherals disabled	-	4.77	-	mA
		V_{DD} = V_{DDA} = 3.3 V, HXTAL = 8 MHz , CPU clock off, System clock = 48 MHz, All peripherals enabled	-	6.53	-	mA
		V_{DD} = V_{DDA} = 3.3 V, HXTAL = 8 MHz , CPU clock off, System Clock = 48 MHz, All peripherals disabled	-	3.69	-	mA
		V_{DD} = V_{DDA} = 3.3 V, HXTAL = 8 MHz , CPU clock off, System clock = 36 MHz, All peripherals enabled	-	5.27	-	mA
		V_{DD} = V_{DDA} = 3.3 V, HXTAL = 8 MHz , CPU clock off, System Clock = 36 MHz, All peripherals disabled	-	3.14	-	mA

Symbol	Parameter	Conditions	Min	Typ(1)	Max	Unit
		V_{DD} = V_{DDA} = 3.3 V, HXTAL = 8 MHz, CPU clock off, System clock = 24 MHz, All peripherals enabled	-	4.01	-	mA
		V_{DD} = V_{DDA} = 3.3 V, HXTAL = 8 MHz , CPU clock off, System Clock = 24 MHz, All peripherals disabled	-	2.60	-	mA
		V_{DD} = V_{DDA} = 3.3 V, HXTAL = 8 MHz , CPU clock off, System clock = 16 MHz, All peripherals enabled	-	3.18	-	mA
		V_{DD} = V_{DDA} = 3.3 V, HXTAL = 8 MHz , CPU clock off, System Clock = 16 MHz, All peripherals disabled	-	2.23	-	mA
		V_{DD} = V_{DDA} = 3.3 V, HXTAL = 8 MHz , CPU clock off, System clock = 8 MHz, All peripherals enabled	-	2.38	-	mA
		V_{DD} = V_{DDA} = 3.3 V, HXTAL = 8 MHz , CPU clock off, System Clock = 8 MHz, All peripherals disabled	-	1.82	-	mA
		V_{DD} = V_{DDA} = 3.3 V, HXTAL = 4 MHz, CPU clock off, System clock = 4 MHz, All peripherals enabled	-	0.77	-	mA
		V_{DD} = V_{DDA} = 3.3 V, HXTAL = 4 MHz, CPU clock off, System Clock = 4 MHz, All peripherals disabled	-	0.49	-	mA
		V_{DD} = V_{DDA} = 3.3 V, HXTAL = 2 MHz, CPU clock off, System clock = 2 MHz, All peripherals enabled	-	0.52	-	mA
		V_{DD} = V_{DDA} = 3.3 V, HXTAL = 2 MHz, CPU clock off, System Clock = 2 MHz, All peripherals disabled	-	0.38	-	mA
	Supply current (Deep-sleep mode)	V_{DD} = V_{DDA} = 3.3 V, LDO in normal power and normal driver mode, IRC40K off, RTC off	-	172.26	330.0	µA
		V_{DD} = V_{DDA} = 3.3 V, LDO in normal power and low driver mode, IRC40K off, RTC off	-	146.29	-	µA
		V_{DD} = V_{DDA} = 3.3 V, LDO in low power and normal driver mode, IRC40K off, RTC off	-	120.37	-	µA
		V_{DD} = V_{DDA} = 3.3 V, LDO in low power and low driver mode, IRC40K off, RTC off	-	94.66	-	µA
	Supply current (Standby mode)	V_{DD} = V_{DDA} = 3.3 V, LXTAL off, IRC40K on, RTC on	-	6.96	-	µA
		V_{DD} = V_{DDA} = 3.3 V, LXTAL off, IRC40K on, RTC off	-	6.63	-	µA

Symbol	Parameter	Conditions	Min	Typ(1)	Max	Unit
		V_{DD} = V_{DDA} = 3.3 V, LXTAL off, IRC40K off, RTC off, VDDA Monitor on	-	5.90	12.1	μA
		V_{DD} = V_{DDA} = 3.3 V, LXTAL off, IRC40K off, RTC off, VDDA Monitor off	-	3.69	-	μA
I_{BAT}	Battery supply current	V_{DD} off, V_{DDA} off, V_{BAT} = 3.6 V, LXTAL on with external crystal, RTC on, LXTAL High driving	-	2.32	-	μA
		V_{DD} off, V_{DDA} off, V_{BAT} = 3.3 V, LXTAL on with external crystal, RTC on, LXTAL High driving	-	2.10	-	μA
		V_{DD} off, V_{DDA} off, V_{BAT} = 2.6 V, LXTAL on with external crystal, RTC on, LXTAL High driving	-	1.85	-	μA
		V_{DD} off, V_{DDA} off, V_{BAT} = 3.6 V, LXTAL on with external crystal, RTC on, LXTAL Medium High driving	-	1.90	-	μA
		V_{DD} off, V_{DDA} off, V_{BAT} = 3.3 V, LXTAL on with external crystal, RTC on, LXTAL Medium High driving	-	1.68	-	μA
		V_{DD} off, V_{DDA} off, V_{BAT} = 2.6 V, LXTAL on with external crystal, RTC on, LXTAL Medium High driving	-	1.44	-	μA
		V_{DD} off, V_{DDA} off, V_{BAT} = 3.6 V, LXTAL on with external crystal, RTC on, LXTAL Medium Low driving	-	1.47	-	μA
		V_{DD} off, V_{DDA} off, V_{BAT} = 3.3 V, LXTAL on with external crystal, RTC on, LXTAL Medium Low driving	-	1.24	-	μA
		V_{DD} off, V_{DDA} off, V_{BAT} = 2.6 V, LXTAL on with external crystal, RTC on, LXTAL Medium Low driving	-	1.01	-	μA
		V_{DD} off, V_{DDA} off, V_{BAT} = 3.6 V, LXTAL on with external crystal, RTC on, LXTAL Low driving	-	1.32	-	μA
		V_{DD} off, V_{DDA} off, V_{BAT} = 3.3 V, LXTAL on with external crystal, RTC on, LXTAL Low driving	-	1.12	-	μA
		V_{DD} off, V_{DDA} off, V_{BAT} = 2.6 V, LXTAL on with external crystal, RTC on, LXTAL Low driving	-	0.88	-	μA

(1) Based on characterization, not tested in production.

(2) Unless otherwise specified, all values given for T_A = 25 ℃ and test result is mean value.

(3) When System Clock is less than 4 MHz, an external source is used, and the HXTAL bypass function is needed, no PLL.

(4) When System Clock is greater than 8 MHz, a crystal 8 MHz is used, and the HXTAL bypass function is closed, using PLL.

(5) When analog peripheral blocks such as ADCs, DACs, HXTAL, LXTAL, IRC8M, or IRC40K are ON, an additional power consumption should be considered.

(6) All GPIOs are configured as analog mode except standby mode.

Figure 4-2. Typical supply current consumption in Run mode

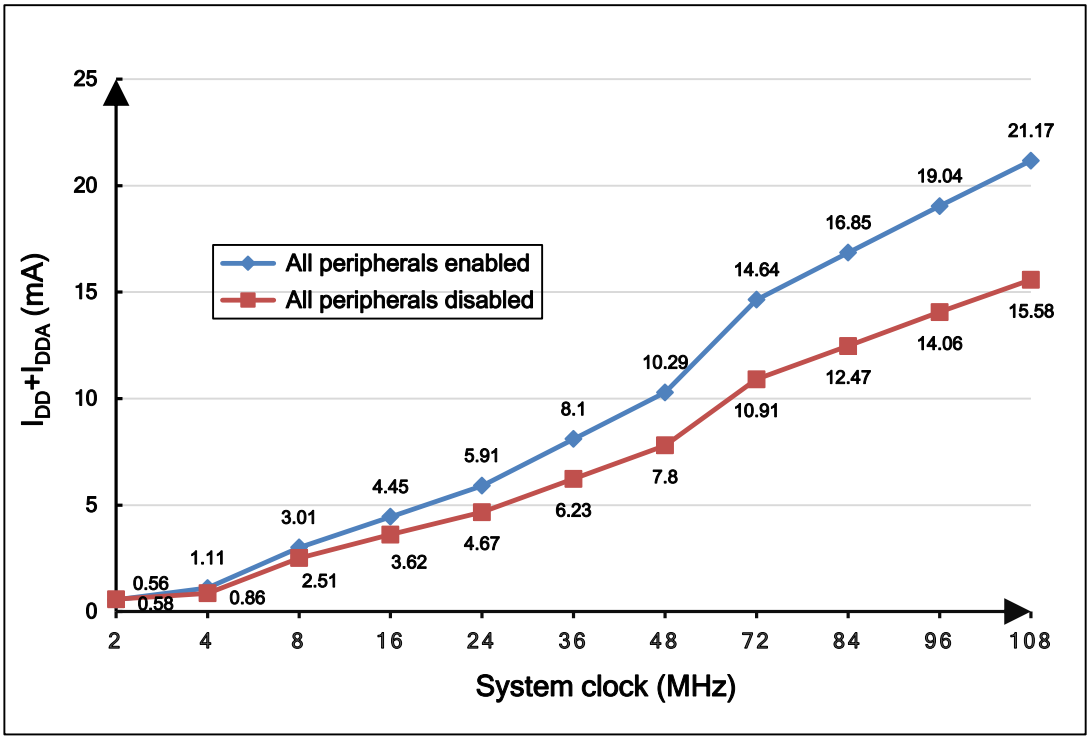

Figure 4-3. Typical supply current consumption in Sleep mode

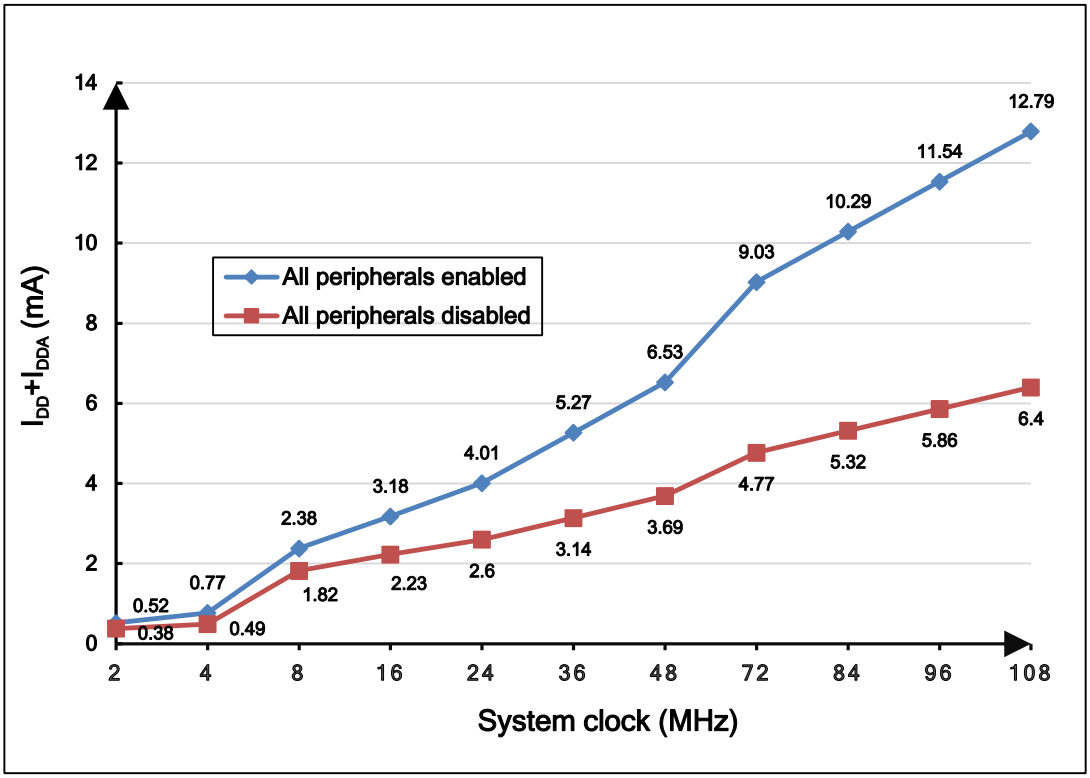

4.4 EMC characteristics

EMS (electromagnetic susceptibility) includes ESD (Electrostatic discharge, positive and negative) and FTB (Burst of Fast Transient voltage, positive and negative) testing result is given in ***Table 4-8. EMS characteristics*** [(1)], based on the EMS levels and classes compliant with IEC 61000 series standard.

Table 4-8. EMS characteristics (1)

Symbol	Parameter	Conditions	Level/Class
V_{ESD}	Voltage applied to all device pins to induce a functional disturbance	V_{DD} = 3.3 V, T_A = +25 °C, LQFP64, f_{HCLK} = 108 MHz conforms to IEC 61000-4-2	3A
V_{FTB}	Fast transient voltage burst applied to induce a functional disturbance through 100 pF on VDD and VSS pins	V_{DD} = 3.3 V, T_A = + 25 °C, LQFP64, f_{HCLK} = 108 MHz conforms to IEC 61000-4-4	3A

(1) Based on characterization, not tested in production.

EMI (Electromagnetic Interference) emission test result is given in the ***Table 4-9. EMI characteristics***(1), The electromagnetic field emitted by the device are monitored while an application, executing EEMBC code, is running. The test is compliant with SAE J1752-3:2017 standard which specifies the test board and the pin loading.

Table 4-9. EMI characteristics(1)

Symbol	Parameter	Conditions	Tested frequency band	Max vs. [f_{HXTAL}/f_{HCLK}] 8/108 MHz	Unit
S_{EMI}	Peak level	V_{DD} = 3.6 V, T_A = +25 °C, LQFP64, f_{HCLK} = 108 MHz, conforms to SAE J1752-3:2017	0.15 MHz to 30 MHz	2.94	dBµV
			30 MHz to 130 MHz	8.13	
			130 MHz to 1 GHz	16.58	

(1) Based on characterization, not tested in production.

4.5 Power supply supervisor characteristics

Table 4-10. Power supply supervisor characteristics

Symbol	Parameter	Conditions	Min	Typ	Max	Unit
V_{LVD}(2)	Low Voltage Detector Threshold	LVDT[2:0] = 000, rising edge	2.06	2.14	2.22	V
		LVDT[2:0] = 000, falling edge	1.96	2.04	2.12	V
		LVDT[2:0] = 001, rising edge	2.20	2.28	2.36	V
		LVDT[2:0] = 001, falling edge	2.10	2.18	2.26	V
		LVDT[2:0] = 010, rising edge	2.34	2.42	2.50	V
		LVDT[2:0] = 010, falling edge	2.24	2.32	2.40	V
		LVDT[2:0] = 011, rising edge	2.47	2.55	2.63	V
		LVDT[2:0] = 011, falling edge	2.37	2.45	2.53	V
		LVDT[2:0] = 100, rising edge	2.61	2.69	2.77	V
		LVDT[2:0] = 100, falling edge	2.51	2.59	2.67	V
		LVDT[2:0] = 101, rising edge	2.75	2.83	2.91	V
		LVDT[2:0] = 101, falling edge	2.65	2.73	2.81	V
		LVDT[2:0] = 110, rising edge	2.89	2.97	3.05	V
		LVDT[2:0] = 110, falling edge	2.79	2.87	2.95	V
		LVDT[2:0] = 111, rising edge	3.03	3.11	3.19	V
		LVDT[2:0] = 111, falling edge	2.93	3.01	3.09	V
$V_{LVDhyst}$(2)	LVD hysteresis	-	-	100	-	mV
V_{POR}(1)	Power on reset threshold	-	-	2.37	-	V
V_{PDR}(1)	Power down reset threshold		-	1.82	-	V

Symbol	Parameter	Conditions	Min	Typ	Max	Unit
$V_{PDRhyst}$(2)	PDR hysteresis		-	600	-	mV
$t_{RSTTEMPO}$(2)	Reset temporization		-	2	-	ms

(1) Based on characterization, not tested in production.

(2) Guaranteed by design, not tested in production.

4.6 Electrical sensitivity

The device is strained in order to determine its performance in terms of electrical sensitivity. Electrostatic discharges (ESD) are applied directly to the pins of the sample. Static latch-up (LU) test is based on the two measurement methods.

Table 4-11. ESD characteristics (1)

Symbol	Parameter	Conditions	Min	Typ	Max	Unit
$V_{ESD(HBM)}$	Electrostatic discharge voltage (human body model)	T_A = 25 °C; JS-001-2017	-	-	6000	V
$V_{ESD(CDM)}$	Electrostatic discharge voltage (charge device model)	T_A = 25 °C; JS-002-2018	-	-	2000	V

(1) Based on characterization, not tested in production.

Table 4-12. Static latch-up characteristics (1)

Symbol	Parameter	Conditions	Min	Typ	Max	Unit
LU	I-test	T_A = 25 °C; JESD78D	-	-	+/-200	mA
	V_{supply} over voltage		-	-	5.4	V

(1) Based on characterization, not tested in production.

4.7 External clock characteristics

Table 4-13. High speed external clock (HXTAL) generated from a crystal/ceramic characteristics

Symbol	Parameter	Conditions	Min	Typ	Max	Unit
f_{HXTAL}(1)	Crystal or ceramic frequency	2.6 V <= V_{DD} <= 3.6 V	4	8	32	MHz
R_F(2)	Feedback resistor	V_{DD} = 3.3 V	-	400	-	kΩ
C_{HXTAL}(2)(3)	Recommended matching capacitance on OSCIN and OSCOUT	-	-	20	30	pF
$Ducy_{(HXTAL)}$(2)	Crystal or ceramic duty cycle	-	30	50	70	%
g_m(2)	Oscillator transconductance	Startup	-	25	-	mA/V
$I_{DD(HXTAL)}$(1)	Crystal or ceramic operating current	V_{DD} = 3.3 V T_A = 25 °C	-	1.3	-	mA
$t_{SUHXTAL}$(1)	Crystal or ceramic startup time	V_{DD} = 3.3 V	-	1.8	-	ms

Symbol	Parameter	Conditions	Min	Typ	Max	Unit
		T_A = 25 °C				

(1) Based on characterization, not tested in production.

(2) Guaranteed by design, not tested in production.

(3) $C_{HXTAL1} = C_{HXTAL2} = 2*(C_{LOAD} - C_S)$, For C_{HXTAL1} and C_{HXTAL2}, it is recommended matching capacitance on OSCIN and OSCOUT. For C_{LOAD}, it is crystal/ceramic load capacitance, provided by the crystal or ceramic manufacturer. For C_S, it is PCB and MCU pin stray capacitance.

Table 4-14. High speed external user clock characteristics (HXTAL in bypass mode)

Symbol	Parameter	Conditions	Min	Typ	Max	Unit
f_{HXTAL_ext}(1)	External clock source or oscillator frequency	V_{DD} = 3.3 V	1	8	50	MHz
V_{HXTALH}(2)	OSCIN input pin high level voltage	V_{DD} = 3.3 V	0.7 V_{DD}	-	V_{DD}	V
V_{HXTALL}(2)	OSCIN input pin low level voltage		V_{SS}	-	0.3 V_{DD}	
$t_{H/L(HXTAL)}$(2)	OSCIN high or low time	-	5	-	-	ns
$t_{R/F(HXTAL)}$(2)	OSCIN rise or fall time	-	-	-	10	
C_{IN}(2)	OSCIN input capacitance	-	-	5	-	pF
$Ducy_{(HXTAL)}$ (2)	Duty cycle	-	30	50	70	%

(1) Based on characterization, not tested in production.

(2) Guaranteed by design, not tested in production.

Table 4-15. Low speed external clock (LXTAL) generated from a crystal/ceramic characteristics

Symbol	Parameter	Conditions	Min	Typ	Max	Unit
f_{LXTAL}(1)	Crystal or ceramic frequency	V_{DD} = 3.3 V	-	32.768	-	kHz
C_{LXTAL}(2)(3)	Recommended matching capacitance on OSC32IN and OSC32OUT	-	-	15	-	pF
$Ducy_{(LXTAL)}$(2)	Crystal or ceramic duty cycle	-	30	-	70	%
g_m(2)	Oscillator transconductance	Lower driving capability	-	4	-	µA/V
		Medium low driving capability	-	6	-	
		Medium high driving capability	-	12	-	
		Higher driving capability	-	18	-	
$I_{DDLXTAL}$ (1)	Crystal or ceramic operating current	Lower driving capability	-	0.6	-	µA
		Medium low driving capability	-	0.7	-	
		Medium high driving capability	-	1.0	-	
		Higher driving capability	-	1.3	-	
$t_{SULXTAL}$(1)(4)	Crystal or ceramic startup	-	-	1.8	-	s

Symbol	Parameter	Conditions	Min	Typ	Max	Unit
	time					

(1) Based on characterization, not tested in production.

(2) Guaranteed by design, not tested in production.

(3) $C_{LXTAL1} = C_{LXTAL2} = 2*(C_{LOAD} - C_S)$, For C_{LXTAL1} and C_{LXTAL2}, it is recommended matching capacitance on OSC32IN and OSC32OUT. For C_{LOAD}, it is crystal/ceramic load capacitance, provided by the crystal or ceramic manufacturer. For CS, it is PCB and MCU pin stray capacitance.

(4) $t_{SULXTAL}$ is the startup time measured from the moment it is enabled (by software) to the 32.768 kHz oscillator stabilization flags is SET. This value varies significantly with the crystal manufacturer.

Table 4-16. Low speed external user clock characteristics (LXTAL in bypass mode)

Symbol	Parameter	Conditions	Min	Typ	Max	Unit
f_{LXTAL_ext}(1)	External clock source or oscillator frequency	V_{DD} = 3.3 V	-	32.768	1000	kHz
V_{LXTALH}(2)	OSC32IN input pin high level voltage	-	0.7 V_{DD}	-	V_{DD}	V
V_{LXTALL}(2)	OSC32IN input pin low level voltage	-	V_{SS}	-	0.3 V_{DD}	
$t_{H/L(LXTAL)}$ (2)	OSC32IN high or low time	-	450	-	-	ns
$t_{R/F(LXTAL)}$ (2)	OSC32IN rise or fall time	-	-	-	50	
C_{IN}(2)	OSC32IN input capacitance	-	-	5	-	pF
$Ducy_{(LXTAL)}$ (2)	Duty cycle	-	30	50	70	%

(1) Based on characterization, not tested in production.

(2) Guaranteed by design, not tested in production.

4.8 Internal clock characteristics

Table 4-17. High speed internal clock (IRC8M) characteristics

Symbol	Parameter	Conditions	Min	Typ	Max	Unit
f_{IRC8M}	High Speed Internal Oscillator (IRC8M) frequency	V_{DD} = V_{DDA} = 3.3 V	-	8	-	MHz
ACC_{IRC8M}	IRC8M oscillator Frequency accuracy, Factory-trimmed	V_{DD} = V_{DDA} = 3.3 V, T_A = -40 °C ~ +85 °C for grade 6 devices(1)	-	-0.62 to 0.46(1)	-	%
		V_{DD} = V_{DDA} = 3.3 V, T_A = -40 °C ~ +105 °C for grade 7 devices(1)	-	-0.7 to 0.46(1)	-	
		V_{DD} = V_{DDA} = 3.3 V, T_A = 25 °C	-1.0	-	+1.0	
	IRC8M oscillator Frequency accuracy, User trimming step(1)	-	-	0.5	-	%
$Ducy_{IRC8M}$(2)	IRC8M oscillator duty cycle	V_{DD} = V_{DDA} = 3.3 V	45	50	55	%
$I_{DDAIRC8M}$(1)	IRC8M oscillator operating	V_{DD} = V_{DDA} = 3.3 V	-	66	-	μA

Symbol	Parameter	Conditions	Min	Typ	Max	Unit
	current					
$t_{SUIRC8M}$(1)	IRC8M oscillator startup time	V_{DD} = V_{DDA} = 3.3 V	-	2	-	µs

(1) Based on characterization, not tested in production.
(2) Guaranteed by design, not tested in production.

Table 4-18. Low speed internal clock (IRC40K) characteristics

Symbol	Parameter	Conditions	Min	Typ	Max	Unit
f_{IRC40K}(1)	Low Speed Internal oscillator (IRC40K) frequency	V_{DD} = V_{DDA} = 3.3 V	20	40	60	kHz
$I_{DDAIRC40K}$(2)	IRC40K oscillator operating current	V_{DD} = V_{DDA} = 3.3 V T_A = 25 °C	-	0.4	-	µA
$t_{SUIRC40K}$(2)	IRC40K oscillator startup time	V_{DD} = V_{DDA} = 3.3 V, T_A = 25 °C	-	110	-	µs

(1) Guaranteed by design, not tested in production.
(2) Based on characterization, not tested in production.

Table 4-19. High speed internal clock (IRC28M) characteristics

Symbol	Parameter	Conditions	Min	Typ	Max	Unit
f_{IRC28M}	High Speed Internal Oscillator (IRC28M) frequency	V_{DD} = V_{DDA} = 3.3 V	-	28	-	MHz
ACC_{IRC28M}	IRC28M oscillator Frequency accuracy, Factory-trimmed	V_{DD} = V_{DDA} = 3.3 V, T_A = -40 °C ~ +85 °C for grade 6 devices(1)	-	-0.86 to 0.9(1)	-	%
		V_{DD} = V_{DDA} = 3.3 V, T_A = -40 °C ~ +105 °C for grade 7 devices(1)	-	-1.02 to 0.90(1)	-	
		V_{DD} = V_{DDA} = 3.3 V, T_A = 25 °C	-1.0	-	+1.0	
	IRC28M oscillator Frequency accuracy, User trimming step(1)	-	-	0.5	-	%
D_{IRC28M}(2)	IRC28M oscillator duty cycle	V_{DD} = V_{DDA} = 3.3 V	45	50	55	%
$I_{DDAIRC28M}$(1))	IRC28M oscillator operating current	V_{DD} = V_{DDA} = 3.3 V	-	120	-	µA
$t_{SUIRC28M}$(1)	IRC28M oscillator startup time	V_{DD} = V_{DDA} = 3.3 V	-	1.6	-	µs

(1) Based on characterization, not tested in production.
(2) Guaranteed by design, not tested in production.

Table 4-20. High speed internal clock (IRC48M) characteristics

Symbol	Parameter	Conditions	Min	Typ	Max	Unit
f_{IRC48M}	High Speed Internal Oscillator (IRC48M)	V_{DD} = V_{DDA} = 3.3 V	-	48	-	MHz

Symbol	Parameter	Conditions	Min	Typ	Max	Unit
	frequency					
ACC_{IRC48M}	IRC48M oscillator Frequency accuracy, Factory-trimmed	V_{DD} = V_{DDA} = 3.3 V, T_A = -40 °C ~ +85 °C for grade 6 devices	-	-0.81 to 0.35(1)	-	%
		V_{DD} = V_{DDA} = 3.3 V, T_A = -40 °C ~ +105 °C for grade 7 devices	-	-0.86 to 0.35(1)	-	
		V_{DD} = V_{DDA} = 3.3 V, T_A = 25 °C	-2.0	-	+2.0	
	IRC48M oscillator Frequency accuracy, User trimming step(1)	-	-	0.12	-	%
D_{IRC48M}(2)	IRC48M oscillator duty cycle	V_{DD} = V_{DDA} = 3.3 V	45	50	55	%
$I_{DDAIRC48M}$(1)	IRC48M oscillator operating current	V_{DD} = V_{DDA} = 3.3 V, f_{HCLK} = f_{HXTAL_PLL} = 108 MHz	-	260	-	μA
$t_{SUIRC48M}$(1)	IRC48M oscillator startup time	V_{DD} = V_{DDA} = 3.3 V, f_{HCLK} = f_{HXTAL_PLL} = 108 MHz	-	1.5	-	μs

(1) Based on characterization, not tested in production.
(2) Guaranteed by design, not tested in production.

4.9 PLL characteristics

Table 4-21. PLL characteristics

Symbol	Parameter	Conditions	Min	Typ	Max	Unit
f_{PLLIN}(1)	PLL input clock frequency	-	1	-	25	MHz
f_{PLLOUT}(2)	PLL output clock frequency	-	16	-	108	MHz
f_{VCO}(2)	PLL VCO output clock frequency	-	-	-	108	MHz
t_{LOCK}(2)	PLL lock time	-	-	-	320	μs
I_{DDA}(1) (3)	Current consumption on V_{DDA}	VCO freq = 108 MHz	-	320	-	μA
$Jitter_{PLL}$(4)	Cycle to cycle Jitter (rms)	System clock	-	32.1	-	ps
	Cycle to cycle Jitter (peak to peak)		-	255.6	-	

(1) Based on characterization, not tested in production.
(2) Guaranteed by design, not tested in production.
(3) System clock = IRC8M = 8 MHz, f_{PLLOUT} = 108 MHz.
(4) Value given with main PLL running.

4.10 Memory characteristics

Table 4-22. Flash memory characteristics(1)

Symbol	Parameter	Conditions	Min	Typ	Max	Unit
PE_{CYC}	Number of guaranteed program /erase cycles before failure (Endurance)	T_A range(2)	100	-	-	kcycles
t_{READ}	Read time at code flash area	-	-	1	-	hclks
	Read time at data flash area		56	-	3536	
t_{RET}	Data retention time	T_A = 70 °C after up to 0 kcycle	-	20	-	years
t_{PROG}	Word programming time	T_A range(2)	-	37.5	86	µs
t_{ERASE}	Page erase time		-	45	300	ms
$t_{MERASE(64KB)}$	Mass erase time		-	0.5	1.6	s

(1) Guaranteed by design and/or characterization, not 100% tested in production.

(2) For grade 6 devices, T_A range= -40° C ~ +85° C. For grade 7 devices, T_A range= -40° C ~ +105° C.

4.11 NRST pin characteristics

Table 4-23. NRST pin characteristics

Symbol	Parameter	Conditions	Min	Typ	Max	Unit
$V_{IL(NRST)}$(1)	NRST Input low level voltage	2.6 V <= V_{DD} = V_{DDA} <= 3.6 V	-0.5	-	0.3 V_{DD}	V
$V_{IH(NRST)}$(1)	NRST Input high level voltage		0.7 V_{DD}	-	V_{DD} + 0.5	
V_{hyst}(1)	Schmidt trigger Voltage hysteresis		-	360	-	mV
R_{pu}(2)	Pull-up equivalent resistor	-	-	40	-	kΩ

(1) Based on characterization, not tested in production.

(2) Guaranteed by design, not tested in production.

Figure 4-4. Recommended external NRST pin circuit(1)

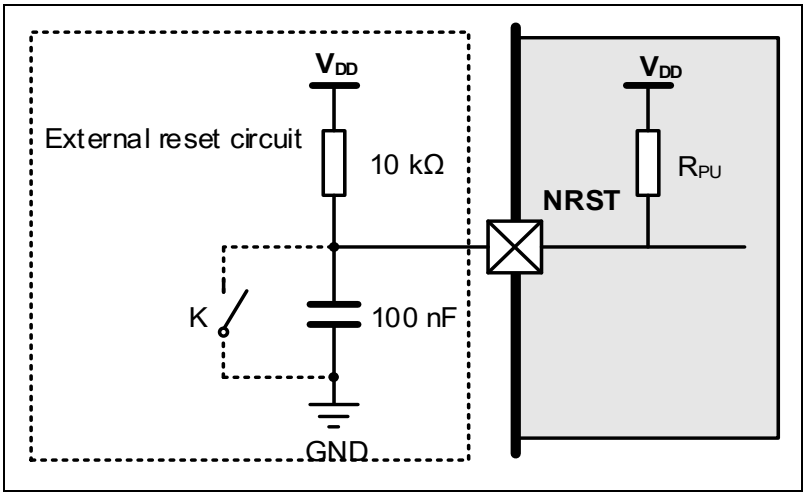

(1) Unless the voltage on NRST pin go below $V_{IL(NRST)}$ level, the device would not generate a reliable reset.

4.12 GPIO characteristics

Table 4-24. I/O port DC characteristics (1) (3)

Symbol	Parameter		Conditions	Min	Typ	Max	Unit
V_{IL}	Standard IO Low level input voltage		2.6 V <= V_{DD} = V_{DDA} <= 3.6 V	-	-	0.3 V_{DD}	V
	5V-tolerant IO Low level input voltage		2.6 V <= V_{DD} = V_{DDA} <= 3.6 V	-	-	0.3 V_{DD}	V
V_{IH}	Standard IO High level input voltage		2.6 V <= V_{DD} = V_{DDA} <= 3.6 V	0.7 V_{DD}	-	-	V
	5V-tolerant IO High level input voltage		2.6 V <= V_{DD} = V_{DDA} <= 3.6 V	0.7 V_{DD}	-	-	V
V_{OL}	Low level output voltage for IO Pins (each I_{IO} = +8 mA)		V_{DD} = 2.6 V	-	0.14	-	V
			V_{DD} = 3.3 V	-	0.13	-	
			V_{DD} = 3.6 V	-	0.12	-	
V_{OL}	Low level output voltage for IO Pins (each I_{IO} = +20 mA)		V_{DD} = 2.6 V	-	0.36	-	V
			V_{DD} = 3.3 V	-	0.32	-	
			V_{DD} = 3.6 V	-	0.31	-	
V_{OH}	High level output voltage for IO Pins (each I_{IO} = +8 mA)		V_{DD} = 2.6 V	-	2.42	-	V
			V_{DD} = 3.3 V	-	3.16	-	
			V_{DD} = 3.6 V	-	3.47	-	
V_{OH}	High level output voltage for IO Pins (each I_{IO} = +20 mA)		V_{DD} = 2.6 V	-	2.15	-	V
			V_{DD} = 3.3 V	-	2.92	-	
			V_{DD} = 3.6 V	-	3.24	-	
R_{PU}(2)	Internal pull-up resistor	All pins	V_{IN} = V_{SS}	30	40	50	kΩ
		PA10	-	7.5	10	13.5	kΩ
R_{PD}(2)	Internal pull-down resistor	All pins	V_{IN} = V_{DD}	30	40	50	kΩ
		PA10	-	7.5	10	13.5	kΩ

(1) Based on characterization, not tested in production.

(2) Guaranteed by design, not tested in production.

(3) All pins except PC13 / PC14 / PC15. Since PC13 to PC15 are supplied through the Power Switch, which can only be obtained by a small current (typical source capability:3 mA shared between these IOs, but sink capability is same as other IO), the speed of GPIOs PC13 to PC15 should not exceed 2 MHz when they are in output mode(maximum load: 30 pF).

Table 4-25. I/O port AC characteristics (1) (2)

GPIOx_OSPD[1:0] bit value(3)	Parameter	Conditions	Type	Unit
GPIOx_OSPD0->OSPDy[1:0] = X0 (IO_Speed = 2 MHz)	T_{Rise}/T_{Fall}	2.6 <= V_{DD} <= 3.6 V, C_L = 10 pF	36.82	ns
		2.6 <= V_{DD} <= 3.6 V, C_L = 30 pF	43.91	
		2.6 <= V_{DD} <= 3.6 V, C_L = 50 pF	49.92	

GPIOx_OSPD[1:0] bit value(3)	Parameter	Conditions	Type	Unit
GPIOx_OSPD0->OSPDy[1:0] = 01 (IO_Speed = 10 MHz)	T_{Rise}/T_{Fall}	2.6 <= V_{DD} <= 3.6 V, C_L = 10 pF	9.27	ns
		2.6 <= V_{DD} <= 3.6 V, C_L = 30 pF	10.46	
		2.6 <= V_{DD} <= 3.6 V, C_L = 50 pF	11.72	
GPIOx_OSPD0->OSPDy[1:0] = 11 (IO_Speed = 50 MHz)	T_{Rise}/T_{Fall}	2.6 <= V_{DD} <= 3.6 V, C_L = 10 pF	1.66	ns
		2.6 <= V_{DD} <= 3.6V, C_L = 30 pF	2.43	
		2.6 <= V_{DD} <= 3.6 V, C_L = 50 pF	3.2	
GPIOx_OSPD0->OSPDy[1:0] = 11 and GPIOx_OSPD1->SPDy = 1 (IO_Speed mode = MAX)	T_{Rise}/T_{Fall}	2.6 <= V_{DD} <= 3.6 V, C_L = 10 pF	1.36	ns
		2.6 <= V_{DD} <= 3.6V, C_L = 30 pF	2.11	
		2.6 <= V_{DD} <= 3.6 V, C_L = 50 pF	2.8	

(1) Based on characterization, not tested in production.
(2) Unless otherwise specified, all test results given for T_A = 25 ℃.
(3) The I/O speed is configured using the GPIOx_OSPD0->OSPDy [1:0] bits. Refer to the GD32F3x0 user manual which is selected to set the GPIO port output speed.
(4) The maximum frequency is defined in *Figure 4-5. I/O port AC characteristics definition*, and maximum frequency cannot exceed 108 MHz.

Figure 4-5. I/O port AC characteristics definition

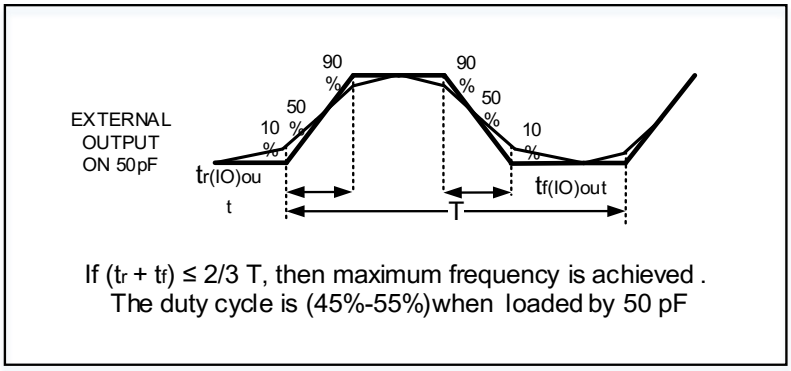

4.13 ADC characteristics

Table 4-26. ADC characteristics

Symbol	Parameter	Conditions	Min	Typ	Max	Unit
V_{DDA}(1)	Operating voltage	-	2.6	3.3	3.6	V
V_{IN}(1)	ADC input voltage range	-	0	-	V_{DDA}	V

Symbol	Parameter	Conditions	Min	Typ	Max	Unit
f_{ADC}(1)	ADC clock	-	0.1	-	36	MHz
f_S(1)	Sampling rate	12-bit	0.007	-	2.57	MSPS
		10-bit	0.008	-	3.00	
		8-bit	0.01	-	3.60	
		6-bit	0.011	-	4.50	
V_{AIN}(1)	Analog input voltage	16 external; 3 internal	0	-	V_{DDA}	V
R_{AIN}(2)	External input impedance	See ***Equation 1***	-	-	171	kΩ
R_{ADC}(2)	Input sampling switch resistance	-	-	-	0.2	kΩ
C_{ADC}(2)	Input sampling capacitance	No pin/pad capacitance included	-	-	4	pF
t_{CAL}(2)	Calibration time	f_{ADC} = 36 MHz	-	3.63	-	μs
t_s(2)	Sampling time	f_{ADC} = 36 MHz	0.04	-	6.65	μs
t_{CONV}(2)	Total conversion time(including sampling time)	12-bit	-	14	-	1/ f_{ADC}
		10-bit	-	12	-	
		8-bit	-	10	-	
		6-bit	-	8	-	
t_{SU}(2)	Startup time	-	-	-	1	μs

(1) Based on characterization, not tested in production.

(2) Guaranteed by design, not tested in production.

Equation 1 : R_{AIN} max formula $R_{AIN} < \frac{T_s}{f_{ADC} * C_{ADC} * \ln(2^{N+2})} - R_{ADC}$

The formula above (***Equation 1***) is used to determine the maximum external impedance allowed for an error below 1/4 of LSB. Here N = 12 (from 12-bit resolution).

Table 4-27. ADC R_{AIN} max for f_{ADC} = 36 MHz (1)

T_s(cycles)	t_s(μs)	R_{AINmax} (kΩ)
1.5	0.04	0.8
7.5	0.20	5.1
13.5	0.37	9.4
28.5	0.79	20.1
41.5	1.15	29.4
55.5	1.54	39.5
71.5	1.98	50.9
239.5	6.65	171

(1) Based on characterization, not tested in production.

Table 4-28. ADC dynamic accuracy at f_{ADC} = 14 MHz (1)

Symbol	Parameter	Test conditions	Min	Typ	Max	Unit
ENOB	Effective number of bits	f_{ADC} = 14 MHz	-	10.9	-	bits
SNDR	Signal-to-noise and distortion ratio	V_{DDA} = V_{DD} = 3.3 V	-	67.3	-	dB
SNR	Signal-to-noise ratio	Input Frequency = 20 kHz	-	67.6	-	
THD	Total harmonic distortion	Temperature = 25℃	-	-79	-	

(1) Based on characterization, not tested in production.

Table 4-29. ADC dynamic accuracy at f_{ADC} = 28 MHz (1)

Symbol	Parameter	Test conditions	Min	Typ	Max	Unit
ENOB	Effective number of bits	f_{ADC} = 28 MHz	-	10.8	-	bits
SNDR	Signal-to-noise and distortion ratio	V_{DDA} = V_{DD} = 3.3 V	-	66.7	-	dB
SNR	Signal-to-noise ratio	Input Frequency = 20 kHz	-	67.0	-	
THD	Total harmonic distortion	Temperature = 25 ℃	-	-78	-	

(1) Based on characterization, not tested in production.

Table 4-30. ADC dynamic accuracy at f_{ADC} = 36 MHz (1)

Symbol	Parameter	Test conditions	Min	Typ	Max	Unit
ENOB	Effective number of bits	f_{ADC} = 36 MHz	-	10.8	-	bits
SNDR	Signal-to-noise and distortion ratio	V_{DDA} = V_{DD} = 3.3 V Input	-	66.7	-	dB
SNR	Signal-to-noise ratio	Frequency = 20 kHz	-	67.0	-	
THD	Total harmonic distortion	Temperature = 25℃	-	-78	-	

(1) Based on characterization, not tested in production.

Table 4-31. ADC static accuracy at f_{ADC} = 14 MHz (1)

Symbol	Parameter	Test conditions	Typ	Max	Unit
Offset	Offset error	f_{ADC} = 14 MHz V_{DDA} = V_{DD} = 3.3 V	+/-1	-	LSB
DNL	Differential linearity error		+/-1	-	
INL	Integral linearity error		+/-1.5	-	

(1) Based on characterization, not tested in production.

4.14 Temperature sensor characteristics

Table 4-32. Temperature sensor characteristics (1)

Symbol	Parameter	Min	Typ	Max	Unit
T_L	V_{SENSE} linearity with temperature	-	+/-1.5	-	℃
Avg_Slope	Average slope	-	4.08	-	mV/℃
V_{25}	Voltage at 25 °C	-	1.44	-	V
t_{S_temp} (2)	ADC sampling time when reading the temperature	-	17.1	-	μs

(1) Based on characterization, not tested in production.

(2) Shortest sampling time can be determined in the application by multiple iterations.

4.15 Comparators characteristics

Table 4-33. CMP characteristics

Symbol	Parameter	Conditions	Min	Typ	Max(1)	Unit
V_{DDA}	Operating voltage	-	2.6	3.3	3.6	V
V_{IN}	Input voltage range	-	0	-	V_{DDA}	V
t_D	Propagation delay for 200mv step with 100mV overdrive	Ultra low power mode	-	0.93	-	μs
		Low power mode	-	0.47	-	μs

Symbol	Parameter	Conditions	Min	Typ	Max(1)	Unit
		Medium power mode	-	0.17	-	µs
		High speed power mode	-	37	-	ns
	Propagation delay for full range step with 100mV overdrive	Ultra low power mode	-	1.57	-	µs
		Low power mode	-	0.80	-	µs
		Medium power mode	-	0.21	-	µs
		High speed power mode	-	46	-	ns
I_{DD}	Current consumption	Ultra low power mode	-	1.53	-	µA
		Low power mode	-	2.84	-	
		Medium power mode	-	8.11	-	
		High speed power mode	-	66.00	-	
V_{offset}	Offset error	-	-	+/-12	-	mV
V_{hyst}	Hysteresis Voltage	No Hysteresis	-	0	-	mV
		Low Hysteresis	-	10	-	
		Medium Hysteresis	-	18	-	
		High Hysteresis	-	36	-	

(1) Guaranteed by design, not tested in production.

Figure 4-6. CMP hysteresis

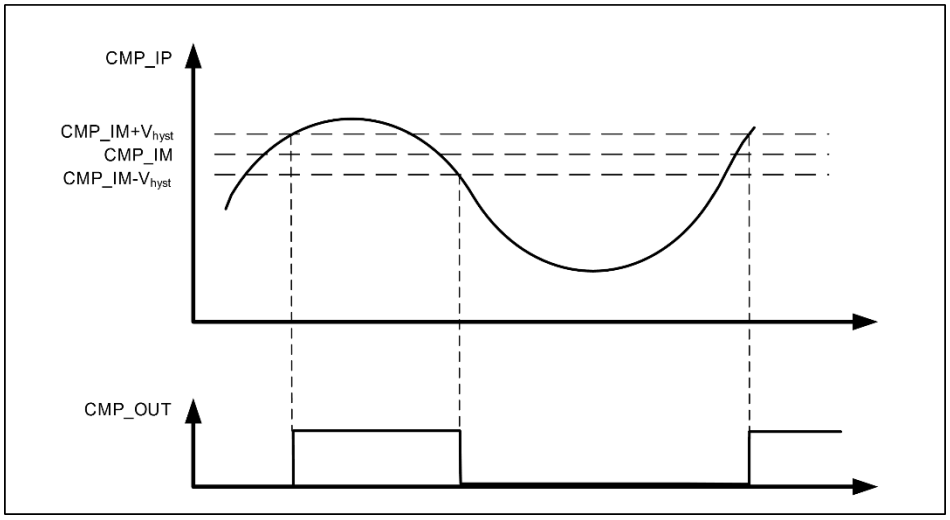

4.16 DAC characteristics

Table 4-34. DAC characteristics

Symbol	Parameter	Conditions	Min	Typ	Max	Unit
V_{DDA}(1)	Operating voltage	-	2.6	3.3	3.6	V
R_{LOAD}(2)	Load resistance	Resistive load with buffer ON	5	-	-	kΩ
Ro(2)	Impedance output with buffer OFF	-	-	-	15	kΩ
C_{LOAD}(2)	Load capacitance	No pin/pad capacitance	-	-	50	pF

Symbol	Parameter	Conditions	Min	Typ	Max	Unit
		included				
DAC_OUT min(2)	Lower DAC_OUT voltage with buffer ON	-	0.2	-	-	V
DAC_OUT max(2)	Higher DAC_OUT voltage with buffer ON	-	-	-	V_{DDA}-0.2	V
DAC_OUT min(2)	Lower DAC_OUT voltage with buffer OFF	-	-	0.5	-	mV
DAC_OUT max(2)	Higher DAC_OUT voltage with buffer OFF	-	-	-	V_{DDA}-1LSB	V
I_{DDA}(1)	DAC current consumption in quiescent mode	With no load, middle code(0x800) on the input, V_{REF+} = 3.6 V	-	380	-	μA
		With no load, worst code(0xF1C) on the input, V_{REF+} = 3.6 V	-	460	-	μA
$I_{DDVREF+}$(1)	DAC current consumption in quiescent mode	With no load, middle code(0x800) on the input, V_{REF+} = 3.6 V	-	120	-	μA
		With no load, worst code(0xF1C) on the input, V_{REF+} = 3.6 V	-	320	-	μA
DNL(1)	Differential non-linearity error	DAC in 12-bit mode	-	-	+/-3	LSB
INL(1)	Integral non-linearity	DAC in 12-bit mode	-	-	+/-4	LSB
Offset(1)	Offset error	DAC in 12-bit mode	-	-	+/-12	LSB
GE(1)	Gain error	DAC in 12-bit mode	-	-	+/-0.5	%
$T_{setting}$(1)	Settling time	C_{LOAD} <= 50 pF, R_{LOAD} >= 5 kΩ	-	0.3	1	μs
T_{wakeup}(2)	Wakeup from off state	-	-	5	10	μs
Update rate(2)	Max frequency for a correct DAC_OUT change from code i to i+/-1LSBs	C_{LOAD} <= 50 pF, R_{LOAD} >= 5 kΩ	-	-	4	MS/s
PSRR(2)	Power supply rejection ratio(to V_{DDA})	-	55	80	-	dB

(1) Based on characterization, not tested in production.

(2) Guaranteed by design, not tested in production.

4.17 I2C characteristics

Table 4-35. I2C characteristics (1) (2) (3)

Symbol	Parameter	Conditions	Standard mode		Fast mode		Fast mode plus		Unit
			Min	Max	Min	Max	Min	Max	
$t_{SCL(H)}$	SCL clock high time	-	4.0	-	0.6	-	0.2	-	μs
$t_{SCL(L)}$	SCL clock low time	-	4.7	-	1.3	-	0.5	-	μs
$t_{SU(SDA)}$	SDA setup time	-	250	-	100	-	50	-	ns
$t_{H(SDA)}$	SDA data hold time	-	0(3)	3450	0	900	0	450	ns
$t_{R(SDA/SCL)}$	SDA and SCL rise time	-	-	1000	-	300	-	120	ns
$t_{F(SDA/SCL)}$	SDA and SCL fall time	-	-	300	-	300	-	120	ns
$t_{H(STA)}$	Start condition hold time	-	4.0	-	0.6	-	0.26	-	μs
$t_{SU(STA)}$	Repeated Start condition setup time	-	4.7	-	0.6	-	0.26	-	μs
$t_{SU(STO)}$	Stop condition setup time	-	4.0	-	0.6	-	0.26	-	μs
t_{BUFF}	Stop to Start condition time (bus free)	-	4.7	-	1.3	-	0.5	-	μs

(1) Guaranteed by design, not tested in production.

(2) To ensure the standard mode I2C frequency, f_{PCLK1} must be at least 2 MHz. To ensure the fast mode I2C frequency, f_{PCLK1} must be at least 4 MHz. To ensure the fast mode plus I2C frequency, f_{PCLK1} must be at least a multiple of 10 MHz.

(3) The device should provide a data hold time of 300 ns at least in order to bridge the undefined region of the falling edge of SCL.

Figure 4-7. I2C bus timing diagram

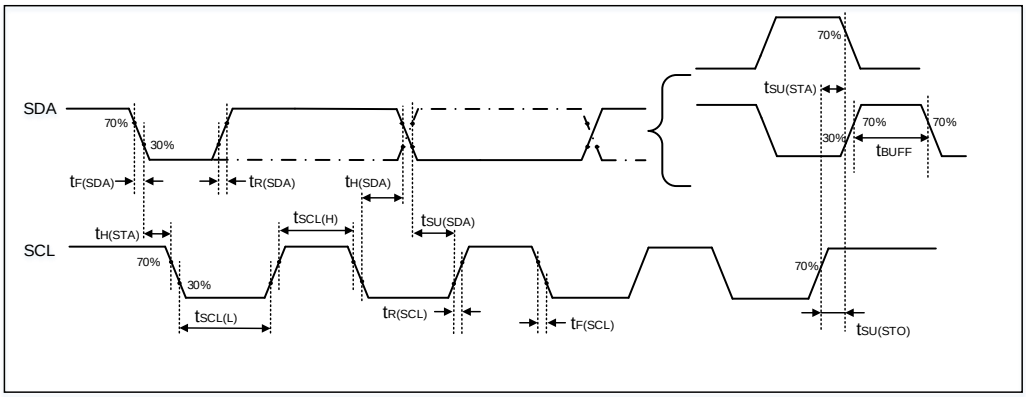

4.18 SPI characteristics

Table 4-36. Standard SPI characteristics

Symbol	Parameter	Conditions	Min	Typ	Max	Unit
f_{SCK}(1)	SCK clock frequency	-	-	-	27	MHz
$t_{SCK(H)}$(1)	SCK clock high time	Master mode, f_{PCLKx} = 108 MHz, presc = 8	35.04	37.04	39.04	ns
$t_{SCK(L)}$(1)	SCK clock low time	Master mode, f_{PCLKx} = 108 MHz, presc = 8	35.04	37.04	39.04	ns
SPI master mode						
$t_{V(MO)}$(2)	Data output valid time	-	-	5	6	ns
$t_{H(MO)}$(2)	Data output hold time	-	3	-	-	ns
$t_{SU(MI)}$(1)	Data input setup time	-	1	-	-	ns
$t_{H(MI)}$(1)	Data input hold time	-	0	-	-	ns
SPI slave mode						
$t_{SU(NSS)}$(1)	NSS enable setup time	-	0	-	-	ns
$t_{H(NSS)}$(1)	NSS enable hold time	-	1	-	-	ns
$t_{A(SO)}$(2)	Data output access time	-	9	-	13	ns
$t_{DIS(SO)}$(2)	Data output disable time	-	9	-	13	ns
$t_{V(SO)}$(2)	Data output valid time	-	-	14	16	ns
$t_{H(SO)}$(2)	Data output hold time	-	11	-	-	ns
$t_{SU(SI)}$(1)	Data input setup time	-	0	-	-	ns
$t_{H(SI)}$(1)	Data input hold time	-	3	-	-	ns

(1) Guaranteed by design, not tested in production.

(2) Based on characterization, not tested in production.

Figure 4-8. SPI timing diagram - master mode

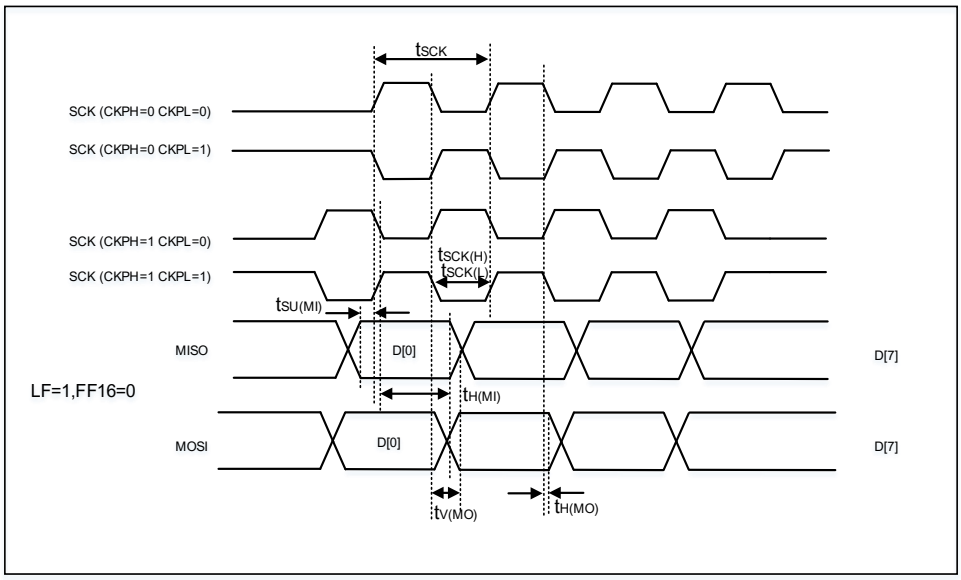

Figure 4-9. SPI timing diagram - slave mode

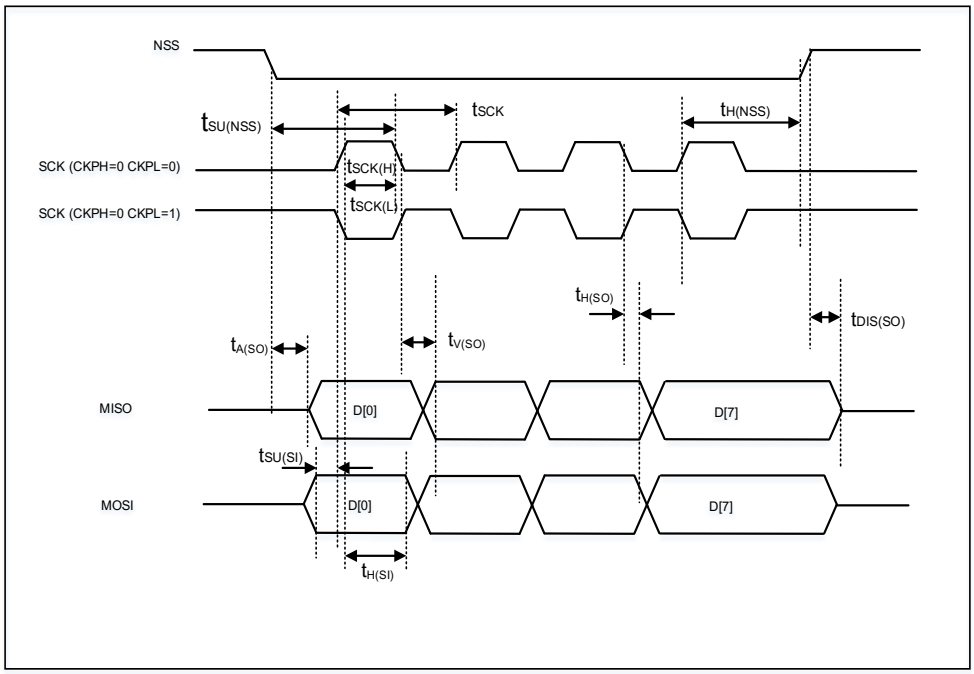

4.19 I2S characteristics

Table 4-37. I2S characteristics

Symbol	Parameter	Conditions	Min	Typ	Max	Unit
f_{CK}(1)	Clock frequency	Master mode (data: 16 bits, Audio frequency = 96 kHz)	3.084	3.086	3.088	MHz
		Slave mode	0	-	10	
t_H(1)	Clock high time	-	162	-	-	ns
t_L(1)	Clock low time		162	-	-	ns
$t_{V(WS)}$(2)	WS valid time	Master mode	0	-	-	ns
$t_{H(WS)}$(2)	WS hold time	Master mode	0	-	-	ns
$t_{SU(WS)}$(1)	WS setup time	Slave mode	0	-	-	ns
$t_{H(WS)}$(1)	WS hold time	Slave mode	2	-	-	ns
$Ducy_{(sck)}$(1)	I2S slave input clock duty cycle	Slave mode	-	50	-	%
$t_{SU(SD_MR)}$(1)	Data input setup time	Master mode	2	-	-	ns
$t_{su(SD_SR)}$(1)	Data input setup time	Slave mode	0	-	-	ns
$t_{H(SD_MR)}$(1)	Data input hold time	Master receiver	0	-	-	ns
$t_{H(SD_SR)}$(1)		Slave receiver	1	-	-	ns
$t_{v(SD_ST)}$(2)	Data output valid time	Slave transmitter (after enable edge)	-	-	12	ns
$t_{H(SD_ST)}$(2)	Data output hold time	Slave transmitter	7	-	-	ns

Symbol	Parameter	Conditions	Min	Typ	Max	Unit
		(after enable edge)				
$t_{V(SD_MT)}$ (2)	Data output valid time	Master transmitter (after enable edge)	-	-	7	ns
$t_{H(SD_MT)}$ (2)	Data output hold time	Master transmitter (after enable edge)	4	-	-	ns

(1) Based on characterization, not tested in production.

(2) Based on characterization, not tested in production.

Figure 4-10. I2S timing diagram - master mode

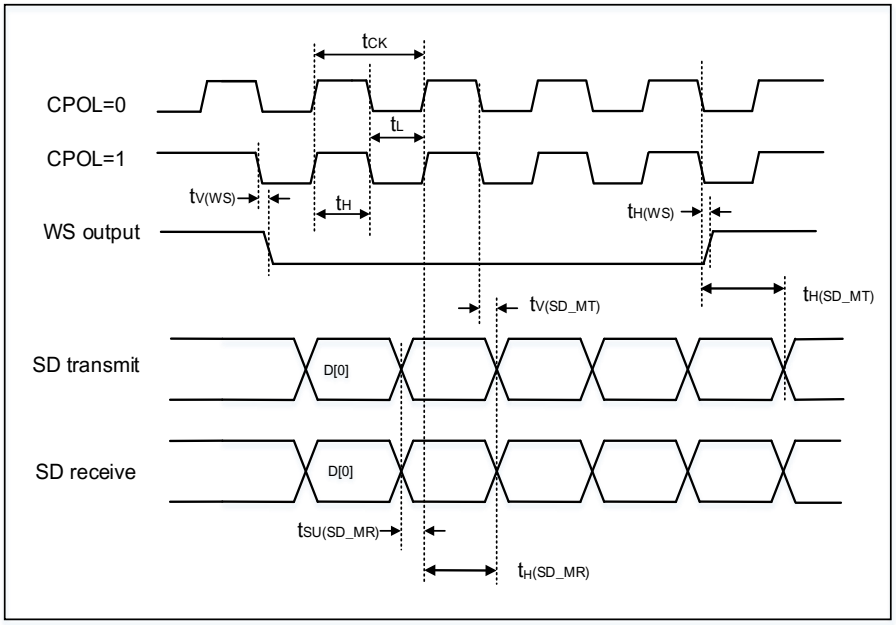

Figure 4-11. I2S timing diagram - slave mode

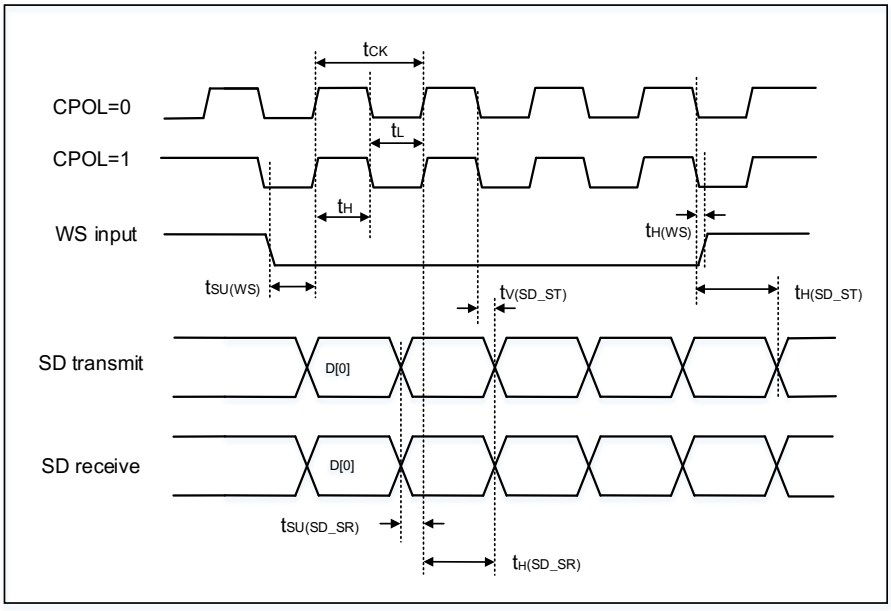

4.20 USART characteristics

Table 4-38. USART characteristics (1)

Symbol	Parameter	Conditions	Min	Typ	Max	Unit
f_{SCK}	SCK clock frequency	f_{PCLKx} = 108 MHz	-	-	54	MHz
$t_{SCK(H)}$	SCK clock high time	f_{PCLKx} = 108 MHz	9.26	-	-	ns
$t_{SCK(L)}$	SCK clock low time	f_{PCLKx} = 108 MHz	9.26	-	-	ns

(1) Based on characterization, not tested in production.

4.21 USBFS characteristics

Table 4-39. USBFS start up time

Symbol	Parameter	Max	Unit
$t_{STARTUP}$(1)	USBFS startup time	1	μs

(1) Guaranteed by design, not tested in production.

Table 4-40. USBFS DC electrical characteristics

Symbol		Parameter	Conditions	Min	Typ	Max	Unit
Input levels(1)	V_{DD}	USBFS operating voltage	-	3	-	3.6	V
	V_{DI}	Differential input sensitivity	-	0.2	-	-	
	V_{CM}	Differential common mode range	Includes V_{DI} range	0.8	-	2.5	
	V_{SE}	Single ended receiver threshold	-	1.3	-	2.0	
Output Levels(2)	V_{OL}	Static output level low	R_L of 1.0 K to 3.6 V	-	0.06	0.3	V
	V_{OH}	Static output level high	R_L of 15 K to V_{SS}	2.8	3.3	3.6	
R_{PD}(2)		PA11, PA12(USB_DM/DP)	V_{IN} = V_{DD}	17	21	24	kΩ
		PA9(USB_VBUS)		0.65	-	2.0	
R_{PU}(2)		PA11, PA12(USB_DM/DP)	V_{IN} = V_{SS}	1.5	1.6	2.1	
		PA9(USB_VBUS)		0.25	0.35	0.55	

(1) Guaranteed by design, not tested in production.

(2) Based on characterization, not tested in production.

Table 4-41. USBFS electrical characteristics (1)

Symbol	Parameter	Conditions	Min	Typ	Max	Unit
t_R	Rise time	C_L = 50 pF	4	-	20	ns
t_F	Fall time	C_L = 50 pF	4	-	20	ns
t_{RFM}	Rise / fall time matching	t_R / t_F	90	-	110	%
V_{CRS}	Output signal crossover voltage	-	1.3	-	2.0	V

(1) Guaranteed by design, not tested in production.

Figure 4-12. USBFS timings: definition of data signal rise and fall time

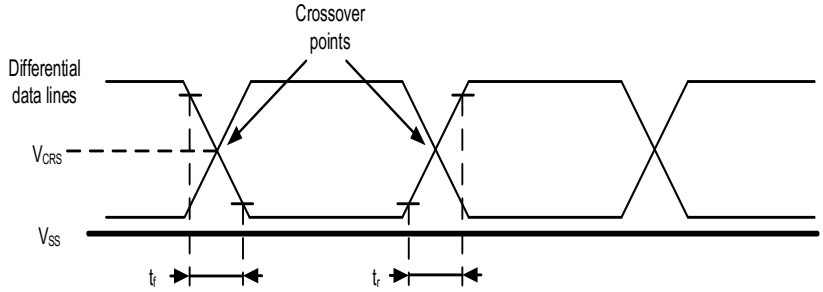

4.22 TIMER characteristics

Table 4-42. TIMER characteristics (1)

Symbol	Parameter	Conditions	Min	Max	Unit
t_{res}	Timer resolution time	-	1	-	$t_{TIMERxCLK}$
		$f_{TIMERxCLK}$ = 108 MHz	9.26	-	ns
f_{EXT}	Timer external clock frequency	-	0	$f_{TIMERxCLK}/2$	MHz
		$f_{TIMERxCLK}$ = 108 MHz	0	54	MHz
RES	Timer resolution	-	-	16/32	bit
$t_{COUNTER}$	16-bit counter clock period when internal clock is selected	-	1	65536	$t_{TIMERxCLK}$
		$f_{TIMERxCLK}$ = 108 MHz	0.0093	606.8	μs
t_{MAX_COUNT}	Maximum possible count	-	-	65536 × 65536	$t_{TIMERxCLK}$
		$f_{TIMERxCLK}$ = 108 MHz	-	39.8	s

(1) Guaranteed by design, not tested in production.

4.23 WDGT characteristics

Table 4-43. FWDGT min/max timeout period at 40 kHz (IRC40K) (1)

Prescaler divider	PR[2:0] bits	Min timeout RLD[11:0] = 0x000	Max timeout RLD[11:0] = 0xFFF	Unit
1/4	000	0.025	409.525	ms
1/8	001	0.025	819.025	
1/16	010	0.025	1638.025	
1/32	011	0.025	3276.025	
1/64	100	0.025	6552.025	
1/128	101	0.025	13104.025	
1/256	110 or 111	0.025	26208.025	

(1) Guaranteed by design, not tested in production.

Table 4-44. WWDGT min-max timeout value at 54 MHz (f_{PCLK1}) (1)

Prescaler divider	PSC[1:0]	Min timeout value CNT[6:0] = 0x40	Unit	Max timeout value CNT[6:0] = 0x7F	Unit
1/1	00	75	μs	4.85	ms
1/2	01	151		9.71	
1/4	10	303		19.42	
1/8	11	606		38.84	

(1) Guaranteed by design, not tested in production.

4.24 Parameter conditions

Unless otherwise specified, all values given for V_{DD} = V_{DDA} = 3.3 V, T_A = 25 ℃.

5 Package information

5.1 LQFP64 package outline dimensions

Figure 5-1. LQFP64 package outline

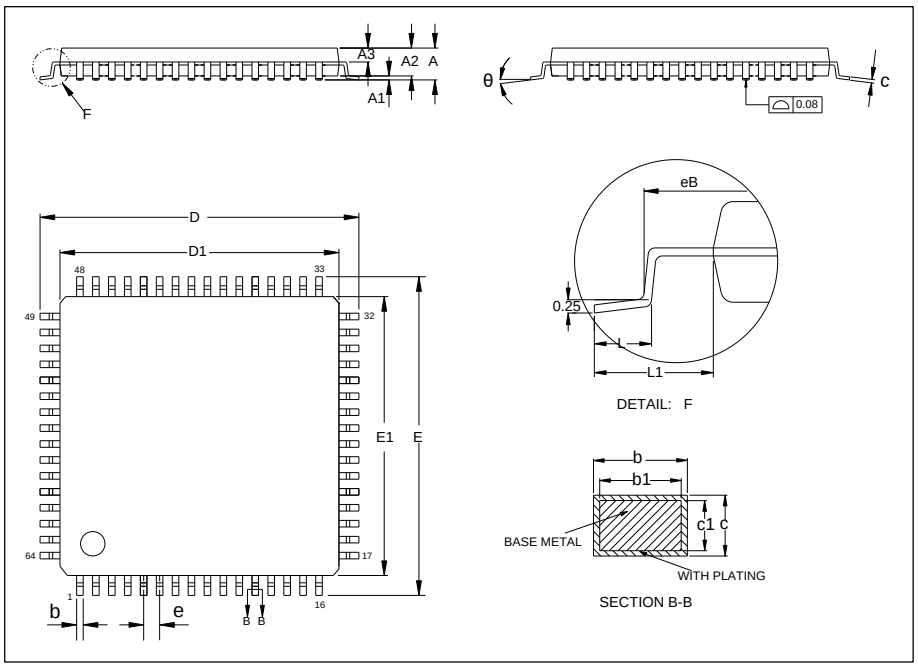

Table 5-1. LQFP64 package dimensions

Symbol	Min	Typ	Max
A	-	-	1.60
A1	0.05	-	0.15
A2	1.35	1.40	1.45
A3	0.59	0.64	0.69
b	0.18	-	0.26
b1	0.17	0.20	0.23
c	0.13	-	0.17
c1	0.12	0.13	0.14
D	11.80	12.00	12.20
D1	9.90	10.00	10.10
E	11.80	12.00	12.20
E1	9.90	10.00	10.10
e	-	0.50	-
eB	11.25	-	11.45
L	0.45	-	0.75
L1	-	1.00	-
θ	0°	-	7°

(Original dimensions are in millimeters)

Figure 5-2. LQFP64 recommended footprint

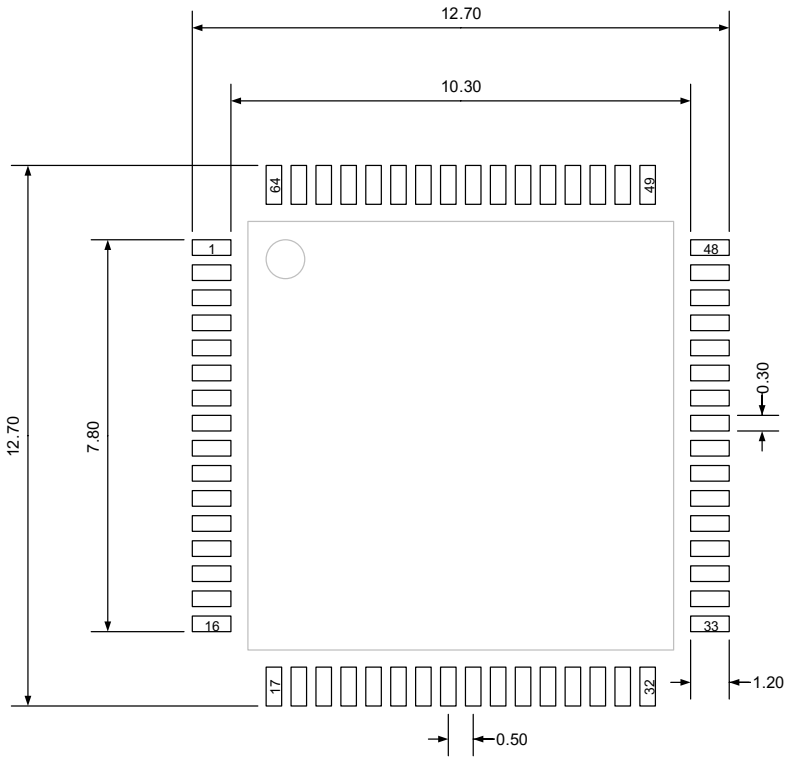

(Original dimensions are in millimeters)

5.2 LQFP48 package outline dimensions

Figure 5-3. LQFP48 package outline

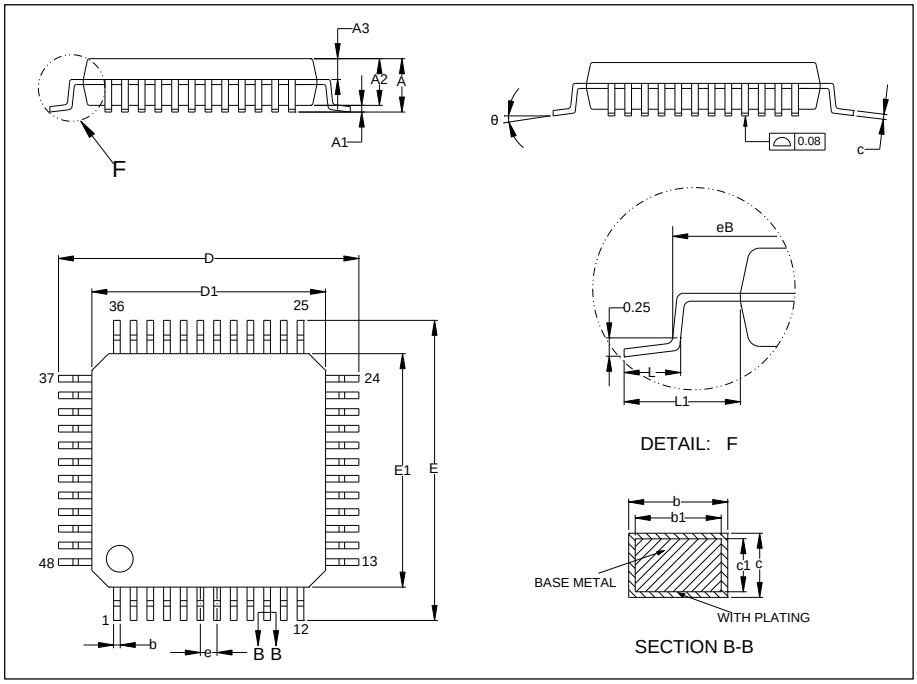

Table 5-2. LQFP48 package dimensions

Symbol	Min	Typ	Max
A	-	-	1.60
A1	0.05	-	0.15
A2	1.35	1.40	1.45
A3	0.59	0.64	0.69
b	0.18	-	0.26
b1	0.17	0.20	0.23
c	0.13	-	0.17
c1	0.12	0.13	0.14
D	8.80	9.00	9.20
D1	6.90	7.00	7.10
E	8.80	9.00	9.20
E1	6.90	7.00	7.10
e	-	0.50	-
eB	8.10	-	8.25
L	0.45	-	0.75
L1	-	1.00	-
θ	0°	-	7°

(Original dimensions are in millimeters)

Figure 5-4. LQFP48 recommended footprint

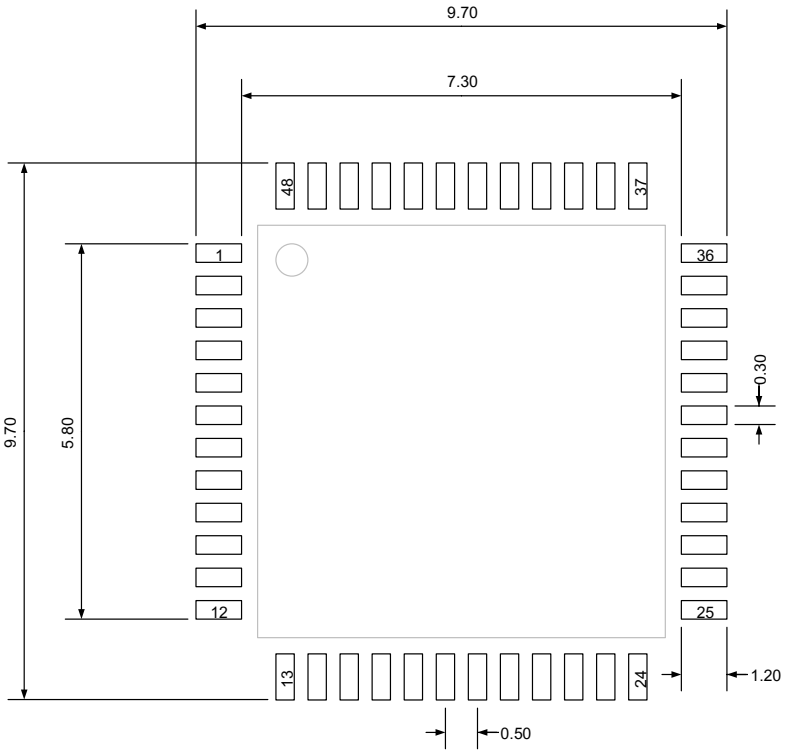

(Original dimensions are in millimeters)

5.3 QFN32 package outline dimensions

Figure 5-5. QFN32 package outline

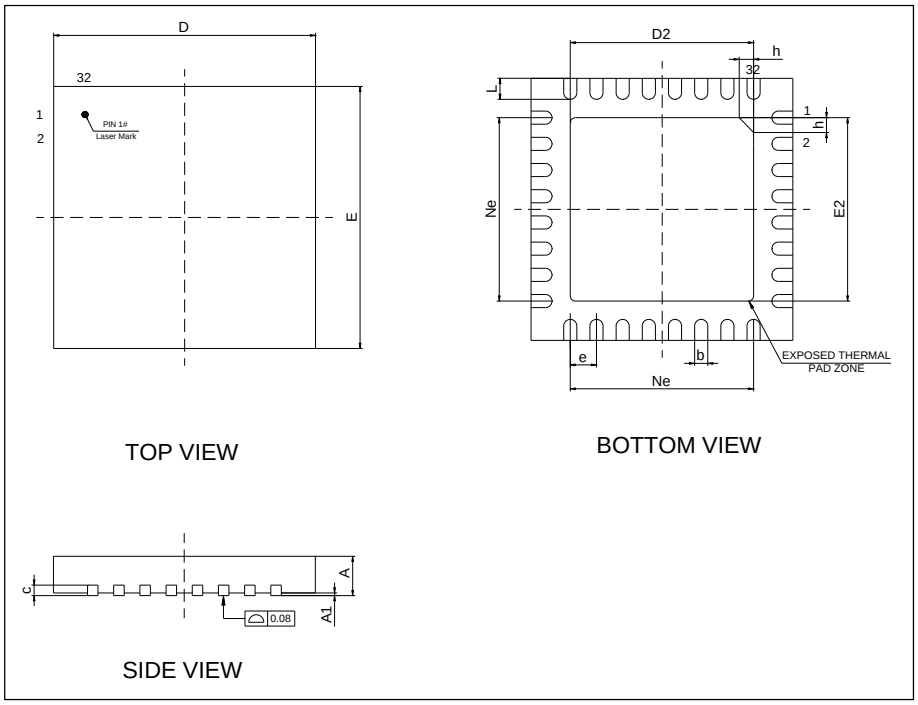

Table 5-3. QFN32 package dimensions

Symbol	Min	Typ	Max
A	0.70	0.75	0.80
A1	0	0.02	0.05
b	0.18	0.25	0.30
c	0.18	0.20	0.25
D	4.90	5.00	5.10
D2	3.40	3.50	3.60
E	4.90	5.00	5.10
E2	3.40	3.50	3.60
e	-	0.50	-
h	0.30	0.35	0.40
L	0.35	0.40	0.45
Ne	-	3.50	-

(Original dimensions are in millimeters)

Figure 5-6. QFN32 recommended footprint

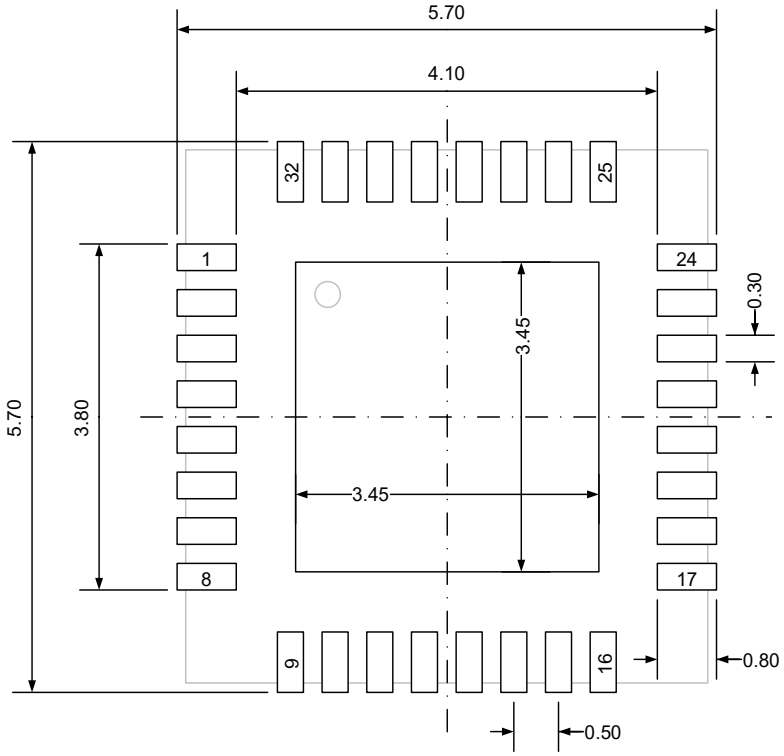

(Original dimensions are in millimeters)

5.4 QFN28 package outline dimensions

Figure 5-7. QFN28 package outline

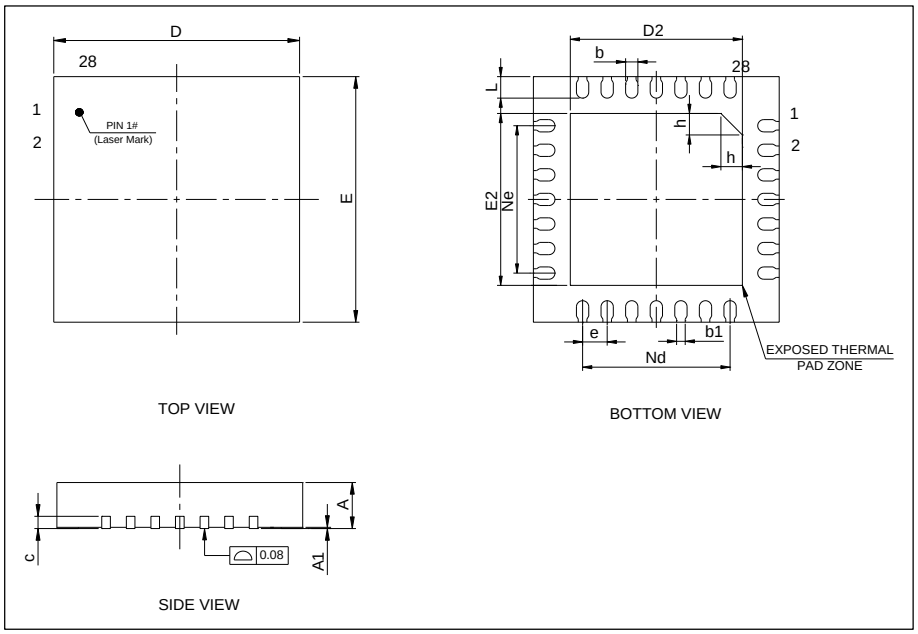

Table 5-4. QFN28 package dimensions

Symbol	Min	Typ	Max
A	0.70	0.75	0.80
A1	0	0.02	0.05
b	0.15	0.20	0.25
b1	-	0.14	-
c	0.18	0.20	0.25
D	3.90	4.00	4.10
D2	2.70	2.80	2.90
E	3.90	4.00	4.10
E2	2.70	2.80	2.90
e	-	0.40	-
h	0.30	0.35	0.40
L	0.30	0.35	0.40
Nd	-	2.40	-
Ne	-	2.40	-

(Original dimensions are in millimeters)

Figure 5-8. QFN28 recommended footprint

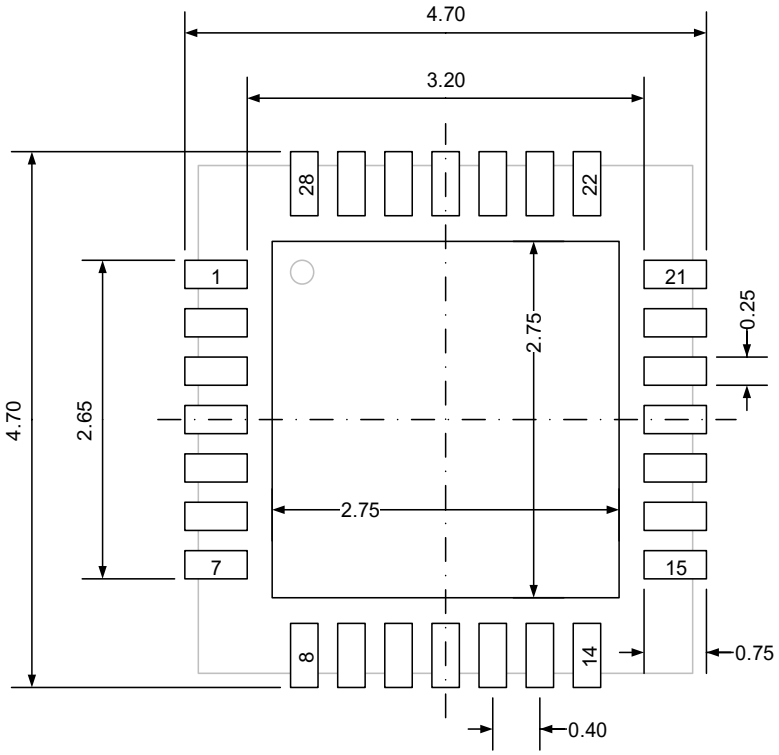

(Original dimensions are in millimeters)

5.5 Thermal characteristics

Thermal resistance is used to characterize the thermal performance of the package device, which is represented by the Greek letter "θ". For semiconductor devices, thermal resistance represents the steady-state temperature rise of the chip junction due to the heat dissipated on the chip surface.

θ_{JA}: Thermal resistance, junction-to-ambient.

θ_{JB}: Thermal resistance, junction-to-board.

θ_{JC}: Thermal resistance, junction-to-case.

Ψ_{JB}: Thermal characterization parameter, junction-to-board.

Ψ_{JT}: Thermal characterization parameter, junction-to-top center.

$$\theta_{JA}=(T_J-T_A)/P_D \quad (5\text{-}1)$$

$$\theta_{JB}=(T_J-T_B)/P_D \quad (5\text{-}2)$$

$$\theta_{JC}=(T_J-T_C)/P_D \quad (5\text{-}3)$$

Where, T_J = Junction temperature.

T_A = Ambient temperature

T_B = Board temperature

T_C = Case temperature which is monitoring on package surface

P_D = Total power dissipation

θ_{JA} represents the resistance of the heat flows from the heating junction to ambient air. It is an indicator of package heat dissipation capability. Lower θ_{JA} can be considerate as better overall thermal performance. θ_{JA} is generally used to estimate junction temperature.

θ_{JB} is used to measure the heat flow resistance between the chip surface and the PCB board.

θ_{JC} represents the thermal resistance between the chip surface and the package top case. θ_{JC} is mainly used to estimate the heat dissipation of the system (using heat sink or other heat dissipation methods outside the device package).

Table 5-5. Package thermal characteristics(1)

Symbol	Condition	Package	Value	Unit
θ_{JA}	Natural convection, 2S2P PCB	LQFP64	61.80	°C/W
		LQFP48	64.40	
		QFN32	48.50	
		QFN28	66.07	
θ_{JB}	Cold plate, 2S2P PCB	LQFP64	42.83	°C/W
		LQFP48	42.32	

Symbol	Condition	Package	Value	Unit
		QFN32	28.32	
		QFN28	32.52	
θ_{JC}	Cold plate, 2S2P PCB	LQFP64	21.98	°C/W
		LQFP48	22.47	
		QFN32	24.07	
		QFN28	30.58	
Ψ_{JB}	Natural convection, 2S2P PCB	LQFP64	43.05	°C/W
		LQFP48	42.42	
		QFN32	28.93	
		QFN28	32.55	
Ψ_{JT}	Natural convection, 2S2P PCB	LQFP64	1.58	°C/W
		LQFP48	1.74	
		QFN32	3.33	
		QFN28	3.27	

(1) Thermal characteristics are based on simulation, and meet JEDEC specification.

6 Ordering information

Table 6-1. Part ordering code for GD32F350xx devices

Ordering code	Flash (KB)	Package	Package type	Temperature operating range
GD32F350RBT6	128	LQFP64	Green	Industrial -40 °C to +85 °C
GD32F350R8T6	64	LQFP64	Green	Industrial -40 °C to +85 °C
GD32F350R6T6	32	LQFP64	Green	Industrial -40 °C to +85 °C
GD32F350R4T6	16	LQFP64	Green	Industrial -40 °C to +85 °C
GD32F350CBT6	128	LQFP48	Green	Industrial -40 °C to +85 °C
GD32F350CBT7	128	LQFP48	Green	Industrial -40 °C to +105 °C
GD32F350C8T6	64	LQFP48	Green	Industrial -40 °C to +85 °C
GD32F350C6T6	32	LQFP48	Green	Industrial -40 °C to +85 °C
GD32F350C4T6	16	LQFP48	Green	Industrial -40 °C to +85 °C
GD32F350KBU7	128	QFN32	Green	Industrial -40 °C to +105 °C
GD32F350K8U6	64	QFN32	Green	Industrial -40 °C to +85 °C
GD32F350K8U7	64	QFN32	Green	Industrial -40 °C to +105 °C
GD32F350K6U6	32	QFN32	Green	Industrial -40 °C to +85 °C
GD32F350K4U6	16	QFN32	Green	Industrial -40 °C to +85 °C
GD32F350G8U6TR	64	QFN28	Green	Industrial -40 °C to +85 °C
GD32F350G6U6TR	32	QFN28	Green	Industrial -40 °C to +85 °C
GD32F350G4U6TR	16	QFN28	Green	Industrial -40 °C to +85 °C

7 Revision history

Table 7-1. Revision history

Revision No.	Description	Date
1.0	Initial Release	Jun.6, 2017
1.1	Characteristics values updated	Jun.20, 2017
1.2	Repair history accumulation error	Jan.24, 2018
1.3	Characteristics values updated	Jun.1, 2019
1.4	Characteristics values, logo, package information and ordering information updated	Oct.8, 2019
1.5	Electrical characteristics, Arm® Cortex®-M4 core description	Jul.10, 2020
1.6	Add LQFP64 package and ordering information	Nov.25, 2020
1.7	Update ***I2C characteristics***. Update ***WDGT characteristics***. Update ***EXTI in Table 2-1. GD32F350xx devices features and peripheral list***. Update ***Serial peripheral interface (SPI)***. Update ***Table 4-26. ADC characteristics***. Update ***Table 4-27. ADC RAIN max for fADC = 36 MHz(1)***. Update ***Table 4-1. Absolute maximum ratings(1) (4)***. Update ***Package information***. Update ***Ordering information***. Update ***SPI characteristics***. Update ***I2S characteristics***.	Dec.10, 2021
1.8	Update ***Arm® Cortex®-M4 core***. Update ***Debug mode***. Update ***Absolute maximum ratings*** . Update ***Operating conditions characteristics*** . Update ***Power consumption*** . Update ***EMC characteristics*** . Update ***Power supply supervisor characteristics*** . Update ***Electrical sensitivity*** . Update ***External clock characteristics*** . Update ***Internal clock characteristics*** . Update ***NRST pin characteristics*** . Update ***GPIO characteristics*** . Update ***ADC characteristics*** .	Apr.7, 2022

Revision No.	Description	Date
	Update ***Temperature sensor characteristics*** .	
1.9	Update ***On-chip memory***. Update ***NRST pin characteristics***. Update ***I2C characteristics***. Update ***LQFP64 package outline dimensions***. Update ***Thermal characteristics***.	Jul. 29, 2022
2.0	Update ***General description***. Update ***Package and operation temperature***. Update ***Absolute maximum ratings***. Update ***Operating conditions characteristics***. Update ***Internal clock characteristics***. Update ***Memory characteristics***. Update ***Ordering information***.	Aug. 22, 2022
2.1	Update ***Table 2-1. GD32F350xx devices features and peripheral list***.	Aug. 30, 2022
2.2	Update ***Power consumption***. Update ***EMC characteristics***. Update ***I2C characteristics***.	Dec. 21, 2022
2.3	Update ***Absolute maximum ratings***. Update ***Operating conditions characteristics***. Update ***EMC characteristics***. Update ***GPIO characteristics***. Update ***Ordering information***.	Mar. 7, 2023
2.4	Update ***Table 2-3 GD32F350Rx LQFP64 pin definitions***. Update ***Table 2-4 GD32F350Cx LQFP48 pin definitions***. Update ***Table 2-5 GD32F350Kx QFN32 pin definitions***. Update ***Table 2-6 GD32F350Gx QFN28 pin definitions***. Add note in chapter ***Operating conditions characteristics***.	Jun. 15, 2023
3.0	Version split. Update ***GPIO characteristics***.	Dec. 4, 2023
3.1	Update ***Pin definitions***. Change abbreviations BKIN->BRKIN. Update ***Absolute maximum ratings***. Update ***Package information***. Update ***Figure 2-6. GD32F350xx clock tree.*** CK_ADC max is 36MHz.	Jun. 7, 2024
3.2	Update ***GD32F350Kx QFN32 pin definitions***. Update ***Boot modes***. Update ***Serial peripheral interface (SPI)***. Update ***Analog to digital converter (ADC)***. Update ***Table 4-5. Start-up timings of Operating conditions(1) (2) (3)***.	Aug. 12, 2025

Revision No.	Description	Date
	Update ***Table 4-6. Power saving mode wakeup timings characteristics(1)***.	
3.3	Update ***Power saving modes***: Modify 1.2V domain to VCORE domain. Update ***Table 4-2. DC operating conditions***: Add V_{CORE} and its typical values, added VBAT superscript description content.	Jan. 31, 2026
3.4	Update ***Table 4 10. Power supply supervisor characteristics***: Add min/max for LVD. Update ***Table 4-19. Low speed internal clock (IRC40K) characteristics***: Modified IRC40K: added Min/Max of frequency range.	Jul. 31, 2026

Important Notice

This document is the property of GigaDevice Semiconductor Inc. and its subsidiaries (the "Company"). This document, including any product of the Company described in this document (the "Product"), is owned by the Company according to the laws of the People's Republic of China and other applicable laws. The Company reserves all rights under such laws and no Intellectual Property Rights are transferred (either wholly or partially) or licensed by the Company (either expressly or impliedly) herein. The names and brands of third party referred thereto (if any) are the property of their respective owner and referred to for identification purposes only.

To the maximum extent permitted by applicable law, the Company makes no representations or warranties of any kind, express or implied, with regard to the merchantability and the fitness for a particular purpose of the Product, nor does the Company assume any liability arising out of the application or use of any Product. Any information provided in this document is provided only for reference purposes. It is the sole responsibility of the user of this document to determine whether the Product is suitable and fit for its applications and products planned, and properly design, program, and test the functionality and safety of its applications and products planned using the Product. The Product is designed, developed, and/or manufactured for ordinary business, industrial, personal, and/or household applications only, and the Product is not designed or intended for use in (i) safety critical applications such as weapons systems, nuclear facilities, atomic energy controller, combustion controller, aeronautic or aerospace applications, traffic signal instruments, pollution control or hazardous substance management; (ii) life-support systems, other medical equipment or systems (including life support equipment and surgical implants); (iii) automotive applications or environments, including but not limited to applications for active and passive safety of automobiles (regardless of front market or aftermarket), for example, EPS, braking, ADAS (camera/fusion), EMS, TCU, BMS, BSG, TPMS, Airbag, Suspension, DMS, ICMS, Domain, ESC, DCDC, e-clutch, advanced-lighting, etc.. Automobile herein means a vehicle propelled by a self-contained motor, engine or the like, such as, without limitation, cars, trucks, motorcycles, electric cars, and other transportation devices; and/or (iv) other uses where the failure of the device or the Product can reasonably be expected to result in personal injury, death, or severe property or environmental damage (collectively "Unintended Uses"). Customers shall take any and all actions to ensure the Product meets the applicable laws and regulations. The Company is not liable for, in whole or in part, and customers shall hereby release the Company as well as its suppliers and/or distributors from, any claim, damage, or other liability arising from or related to all Unintended Uses of the Product. Customers shall indemnify and hold the Company, and its officers, employees, subsidiaries, affiliates as well as its suppliers and/or distributors harmless from and against all claims, costs, damages, and other liabilities, including claims for personal injury or death, arising from or related to any Unintended Uses of the Product.

Information in this document is provided solely in connection with the Product. The Company reserves the right to make changes, corrections, modifications or improvements to this document and the Product described herein at any time without notice. The Company shall have no responsibility whatsoever for conflicts or incompatibilities arising from future changes to them. Information in this document supersedes and replaces information previously supplied in any prior versions of this document.

© 2026 GigaDevice Semiconductor Inc. - All rights reserved