ADC

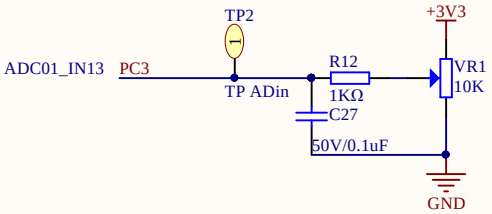

DAC

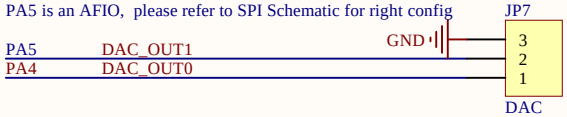

Company Name: GigaDevice		
File Name: AD_DA		
Revision: 1.0	Data: 2022-7	Author: XuFei

CAN

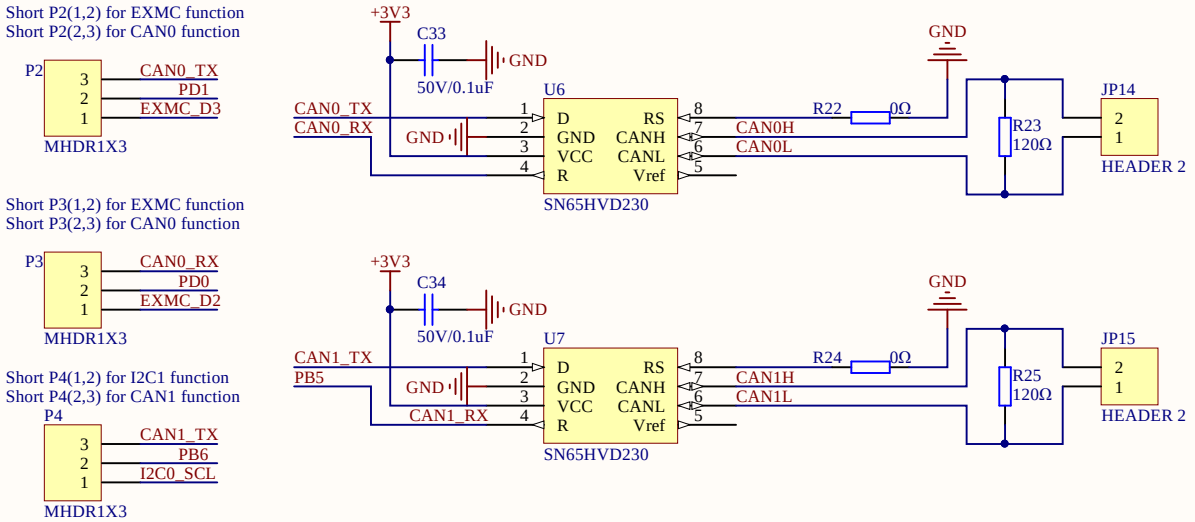

Company Name: GigaDevice		
File Name: CAN		
Revision: 1.0	Data: 2022-7	Author: XuFei

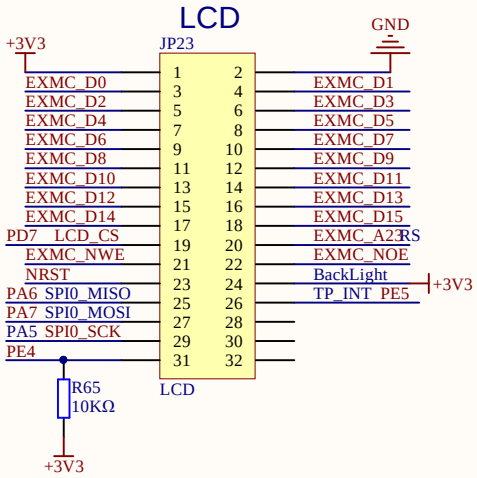

PD0,PD1 are AFIOs, please refer to CAN schematic for right config

PD14	EXMC_D0
PD15	EXMC_D1
PD0	EXMC_D2
PD1	EXMC_D3
PE7	EXMC_D4
PE8	EXMC_D5
PE9	EXMC_D6
PE10	EXMC_D7
PE11	EXMC_D8
PE12	EXMC_D9
PE13	EXMC_D10
PE14	EXMC_D11
PE15	EXMC_D12
PD8	EXMC_D13
PD9	EXMC_D14
PD10	EXMC_D15

PE2	EXMC_A23
PD4	EXMC_NOE
PD5	EXMC_NWE

Company Name: GigaDevice		
File Name: EXMC		
Revision: 1.0	Data: 2022-7	Author: XuFei

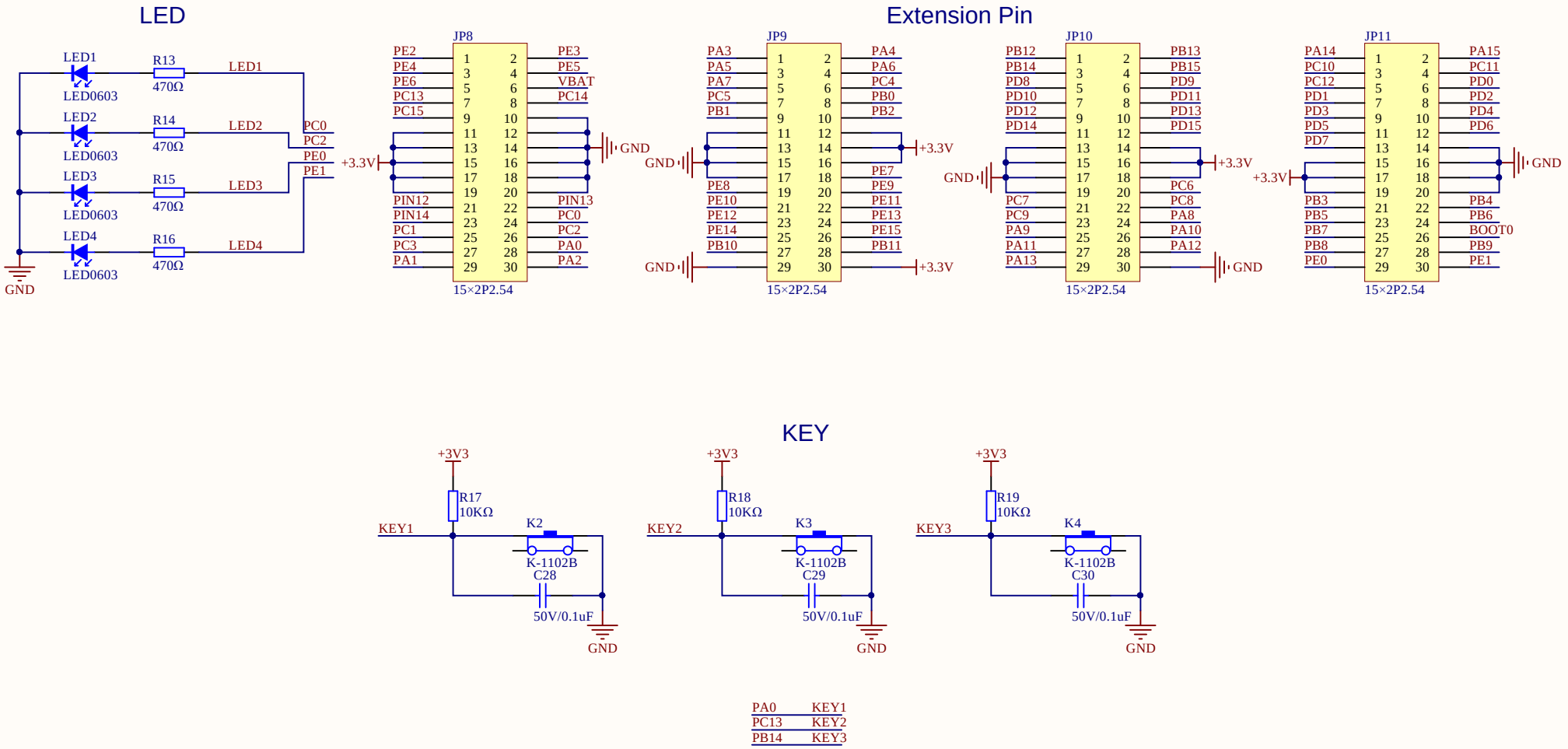

Company Name: GigaDevice		
File Name: Extension		
Revision: 1.0	Data: 2022-7	Author: XuFei

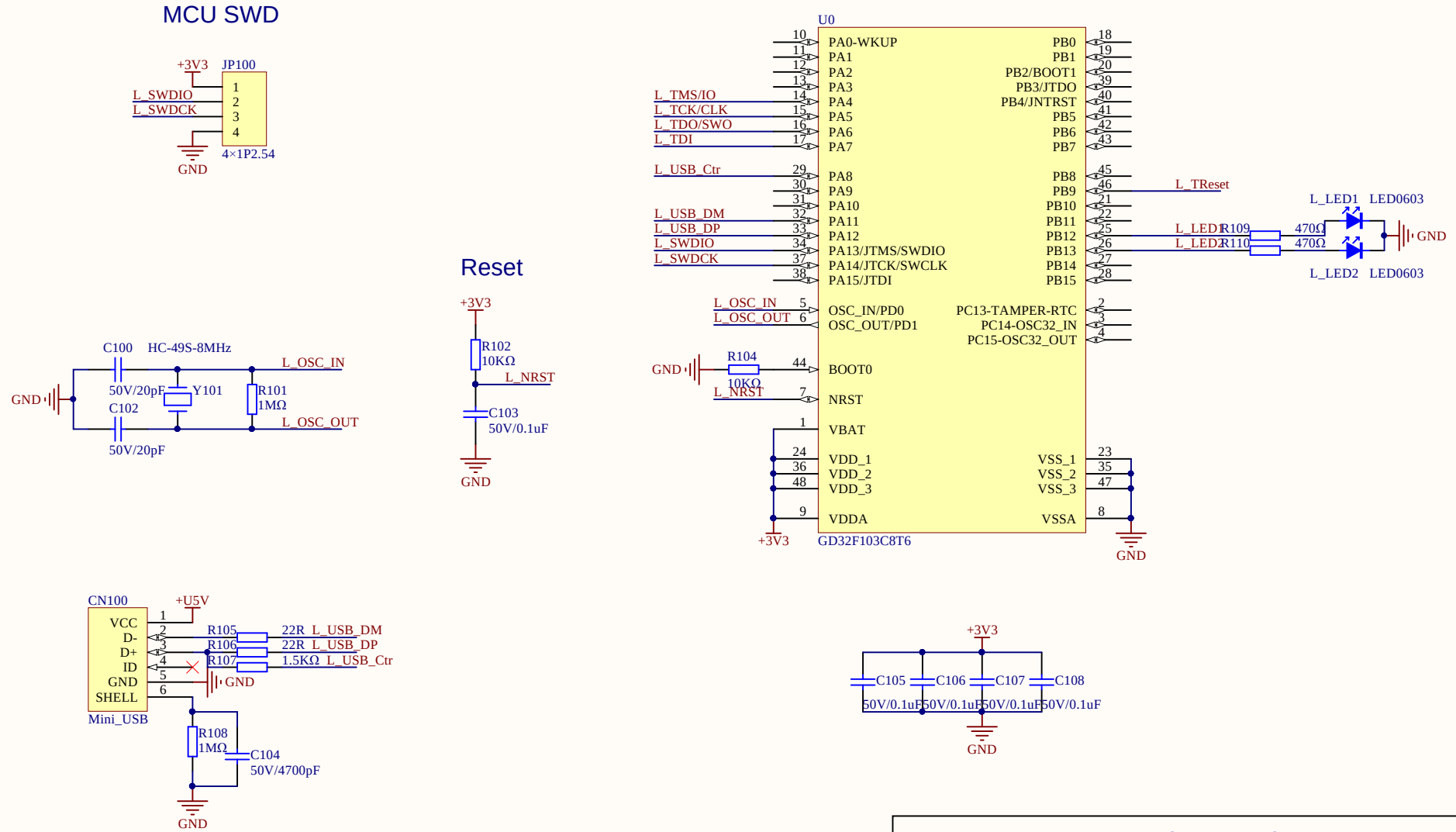

Company Name: GigaDevice		
File Name: GDLink		
Revision: 1.0	Data: 2022-7	Author: XuFei

I2C

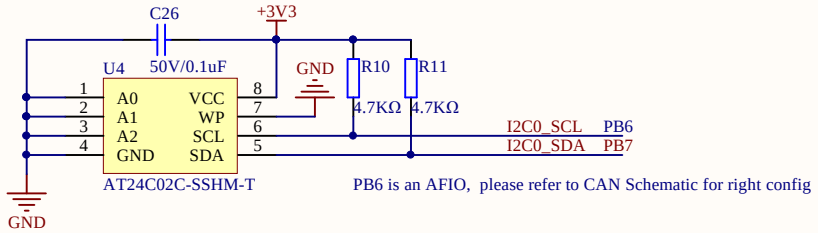

Company Name: GigaDevice		
File Name: I2C		
Revision: 1.0	Data: 2022-7	Author: XuFei

I2S

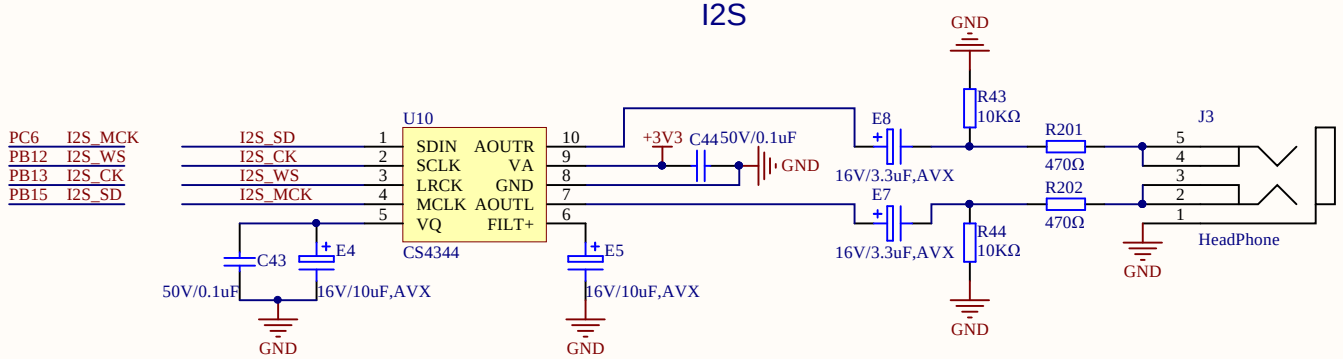

Company Name: GigaDevice		
File Name: I2S		
Revision: 1.0	Data: 2022-7	Author: Lixin

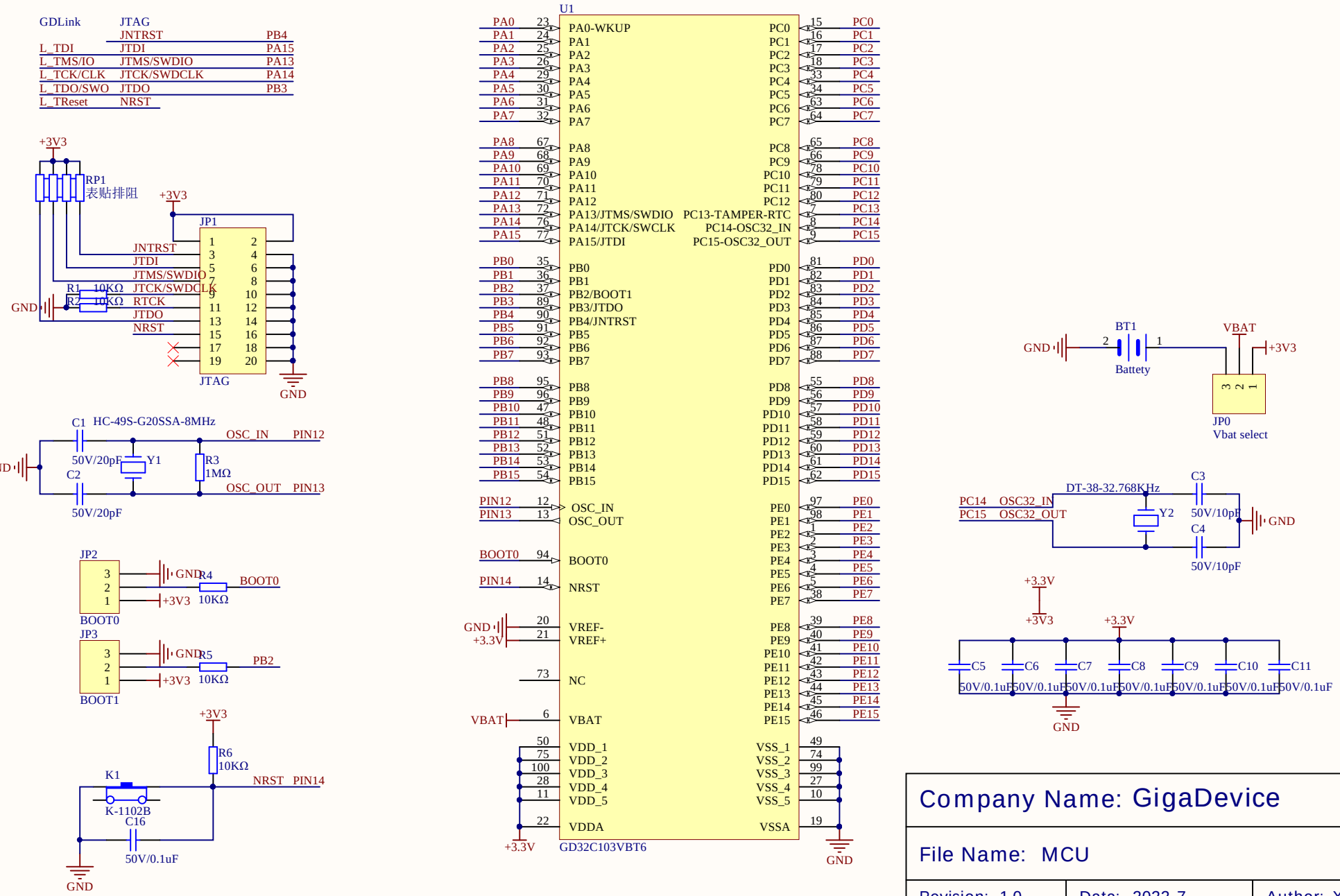

Company Name: GigaDevice		
File Name: MCU		
Revision: 1.0	Data: 2022-7	Author: XuFei

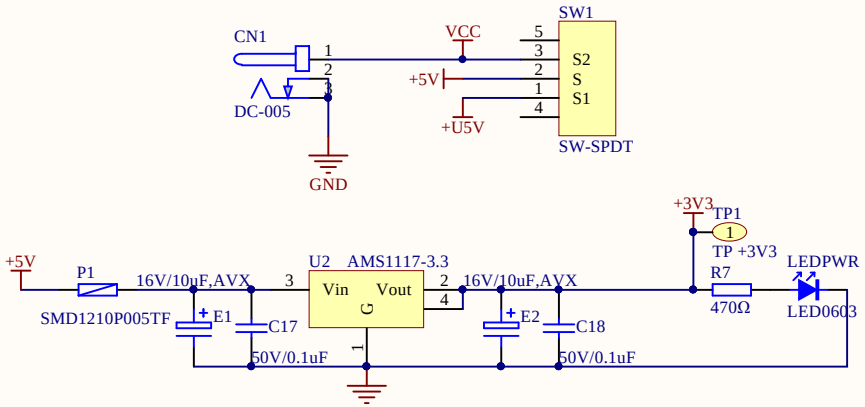

Company Name: GigaDevice		
File Name: Power		
Revision: 1.0	Data: 2022-7	Author: XuFei

SPI Flash

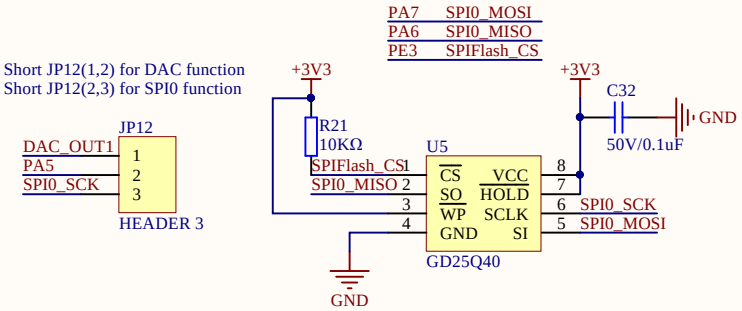

Company Name: GigaDevice		
File Name: SPI		
Revision: 1.0	Data: 2022-7	Author: XuFei

USART0/USART1

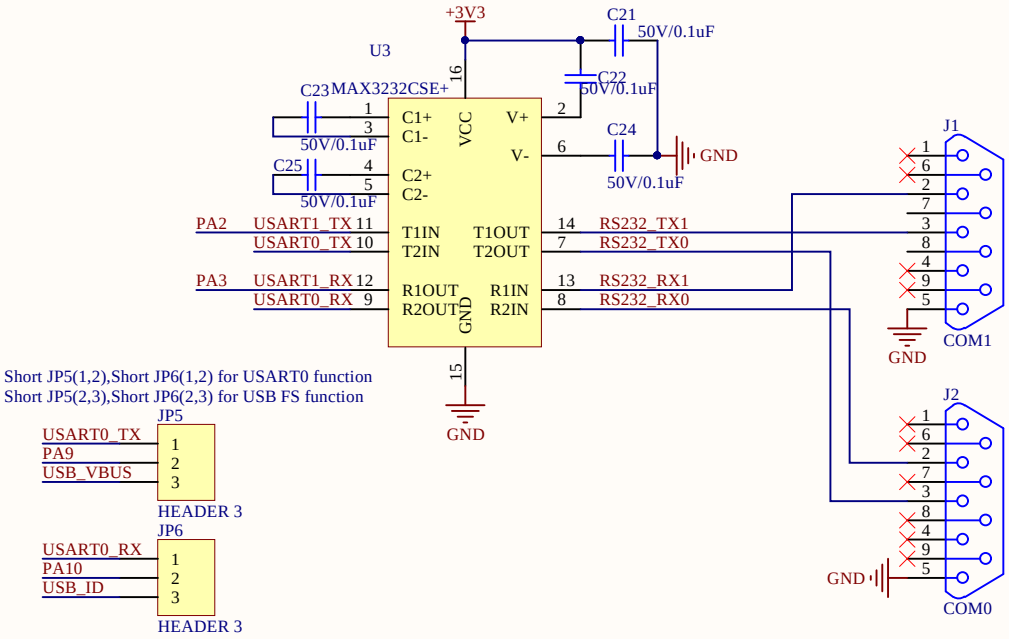

Company Name: GigaDevice		
File Name: USART		
Revision: 1.0	Data: 2022-7	Author: XuFei

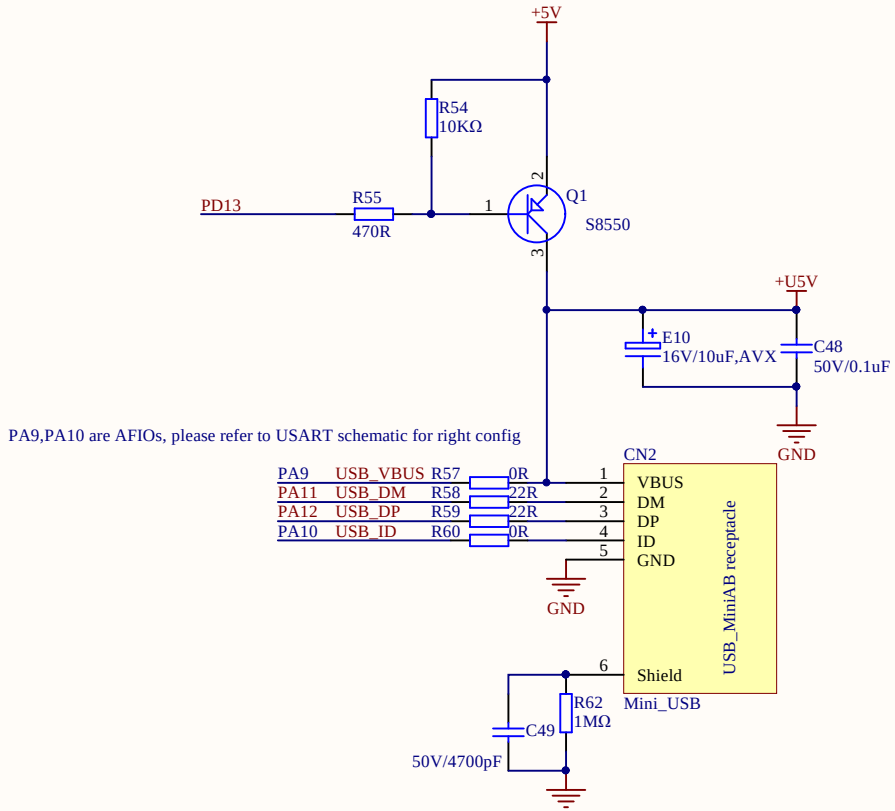

Company Name: GigaDevice		
File Name: USBFS		
Revision: 1.1	Data: 2022-7	Author: Xufei

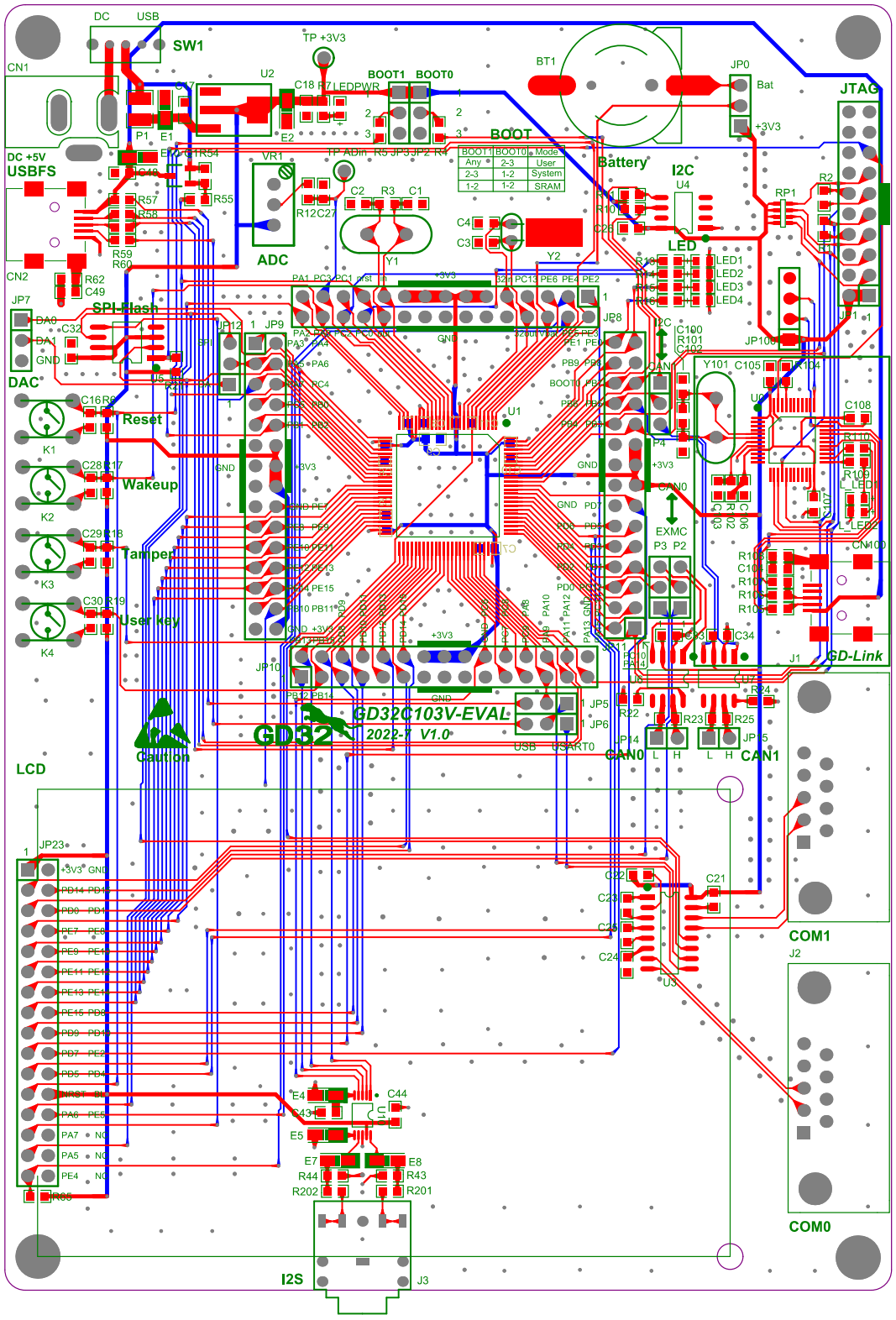

DC
USB
SW1
CN1
TP +3V3
U2
C18
LEDPWR
BOOT1
BOOT0
BT1
JP0
Bat
+3V3
JTAG
BOOT
Battery
I2C
U4
RP1
R2
DC +5V
USBFS
P1
E1
E2
VR1
ADC
R12
C27
C2
R3
C1
C4
C3
Y1
Y2
LED
LED1
LED2
LED3
LED4
CN2
R62
C49
JP7
SPI-Flash
DAC
C32
GND
JP12
JP9
JP8
JP100
Y101
C105
C108
Reset
K1
C16
R6
Wakeup
K2
C28
R17
Tamper
K3
C29
R18
User key
K4
C30
R19
U1
P4
CAN0
EXMC
P3
P2
CN100
GD-Link
J1
JP10
GD32C103V-EVAL
2022-7 V1.0
GD32
Caution
USB
USART0
JP5
JP6
JP14
JP15
CAN0
CAN1
LCD
JP23
C22
C21
C23
C25
C24
U3
COM1
J2
COM0
E4
C44
C43
E5
E7
E8
R44
R43
R202
R201
I2S
J3