ADC

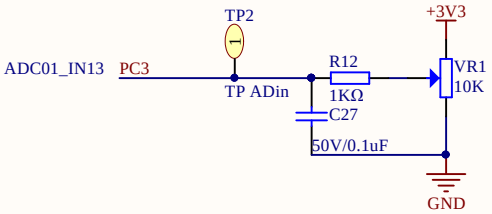

DAC

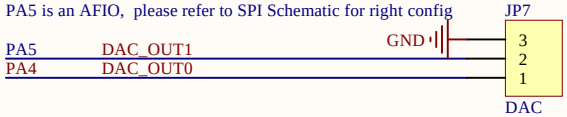

Company Name: GigaDevice		
File Name: AD_DA		
Revision: 1.0	Data: 2022-7	Author: XuFei

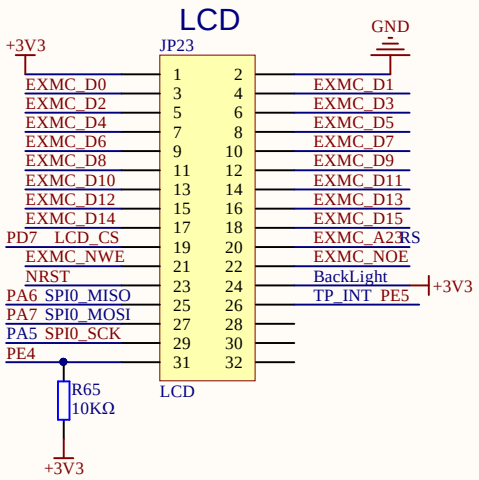

PD14	EXMC_D0
PD15	EXMC_D1
PD0	EXMC_D2
PD1	EXMC_D3
PE7	EXMC_D4
PE8	EXMC_D5
PE9	EXMC_D6
PE10	EXMC_D7
PE11	EXMC_D8
PE12	EXMC_D9
PE13	EXMC_D10
PE14	EXMC_D11
PE15	EXMC_D12
PD8	EXMC_D13
PD9	EXMC_D14
PD10	EXMC_D15

PE2	EXMC_A23
PD4	EXMC_NOE
PD5	EXMC_NWE

Company Name: GigaDevice		
File Name: EXMC		
Revision: 1.0	Data: 2022-7	Author: XuFei

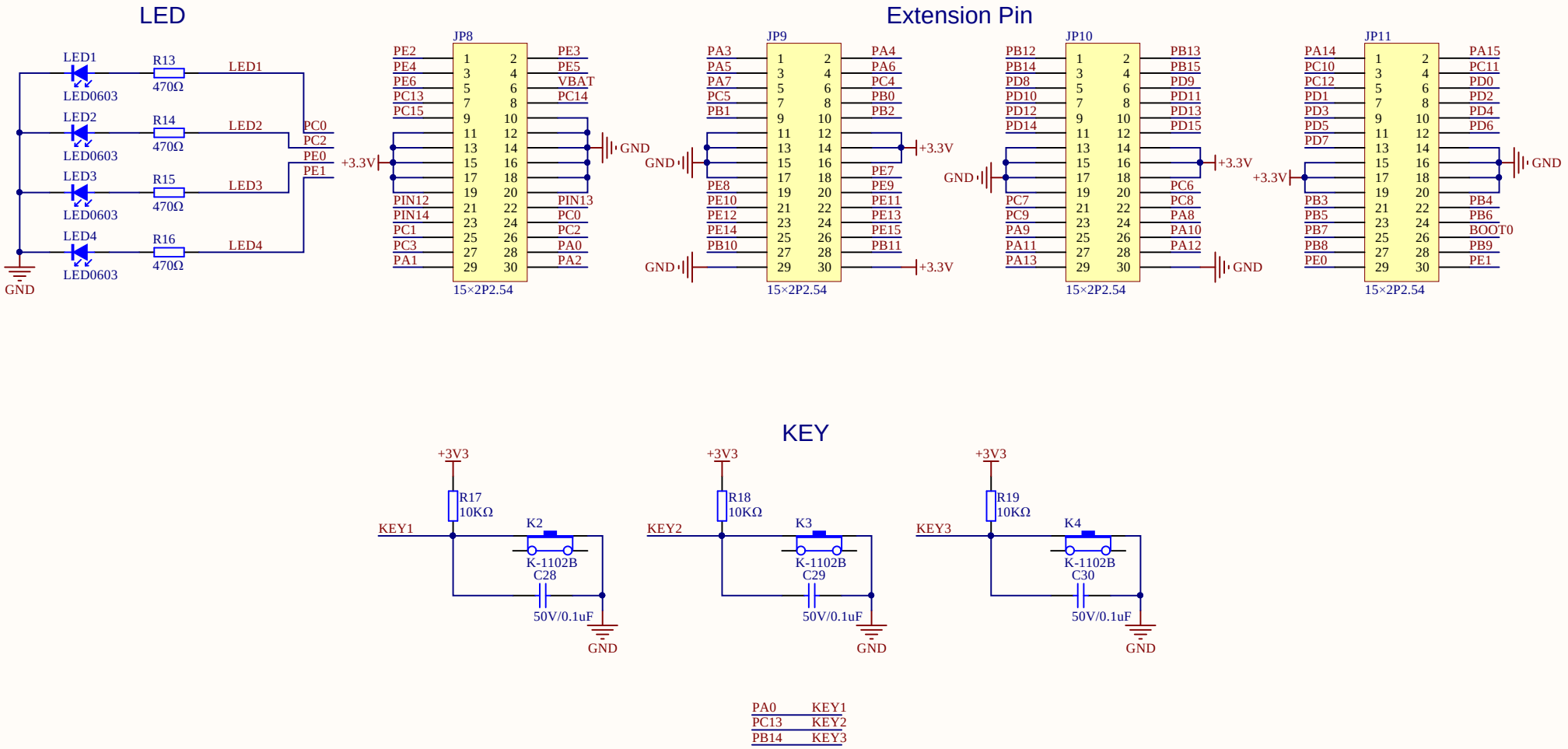

Company Name: GigaDevice		
File Name: Extension		
Revision: 1.0	Data: 2022-7	Author: XuFei

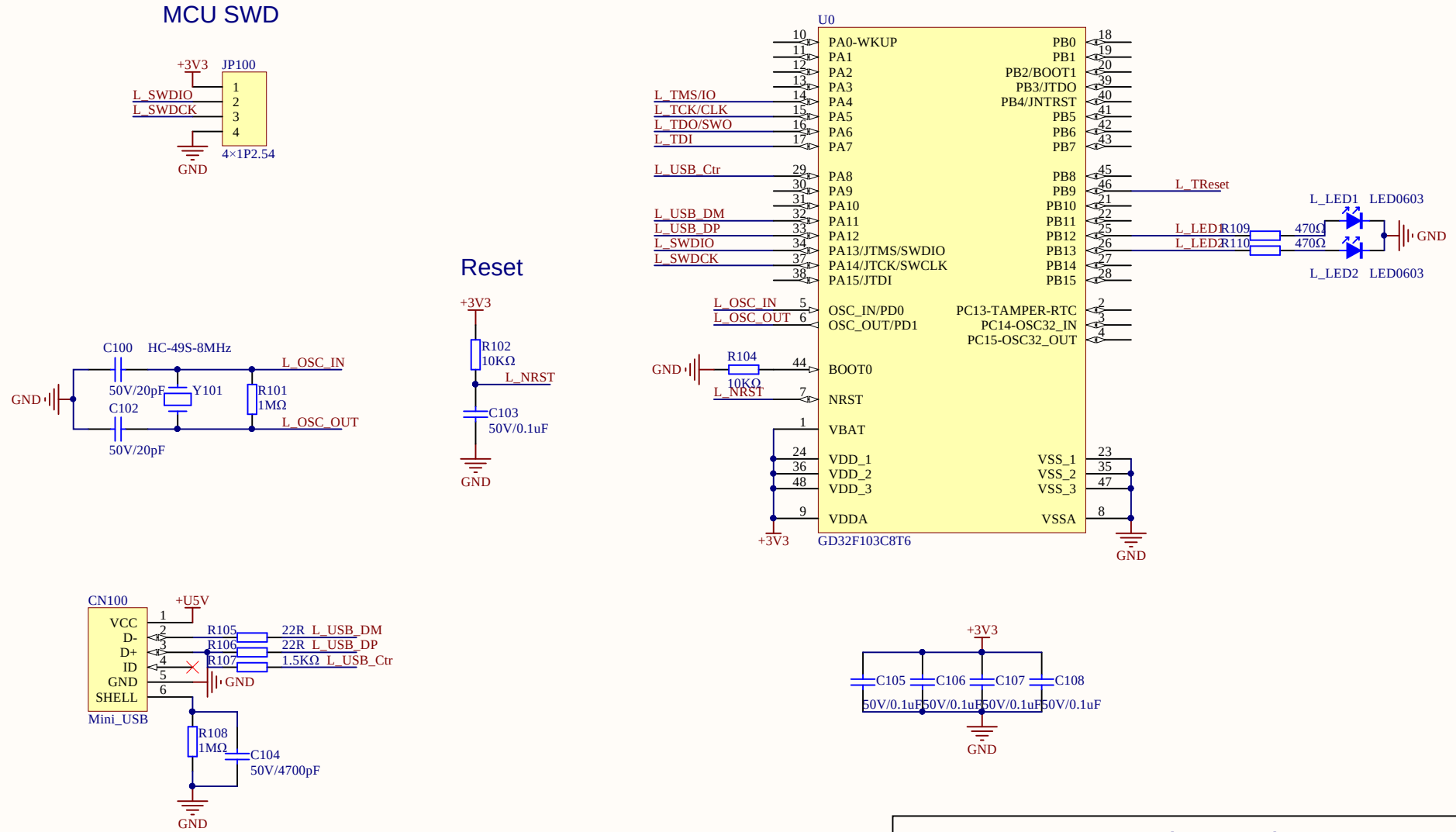

Company Name: GigaDevice		
File Name: GDLink		
Revision: 1.0	Data: 2022-7	Author: XuFei

I2C

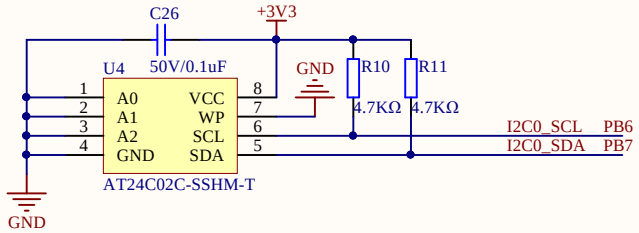

Company Name: GigaDevice		
File Name: I2C		
Revision: 1.0	Data: 2022-7	Author: XuFei

I2S

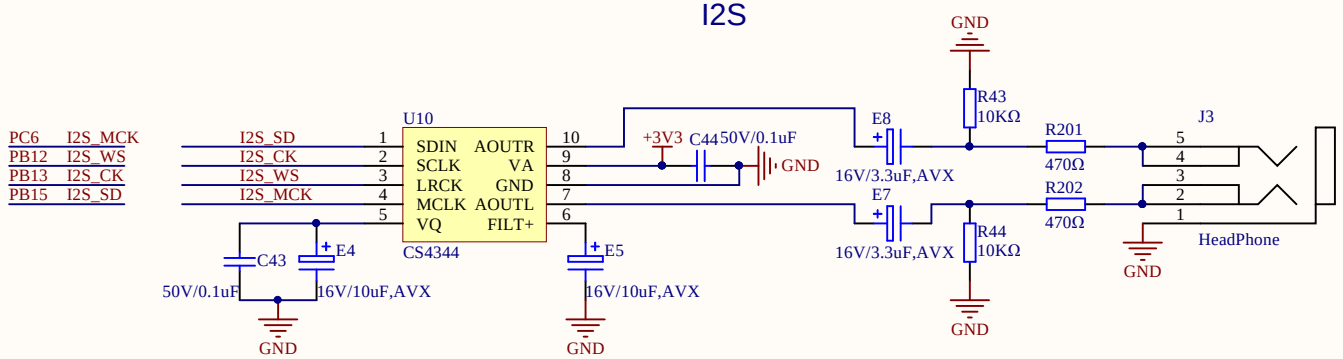

Company Name: GigaDevice		
File Name: I2S		
Revision: 1.0	Data: 2022-7	Author: Lixin

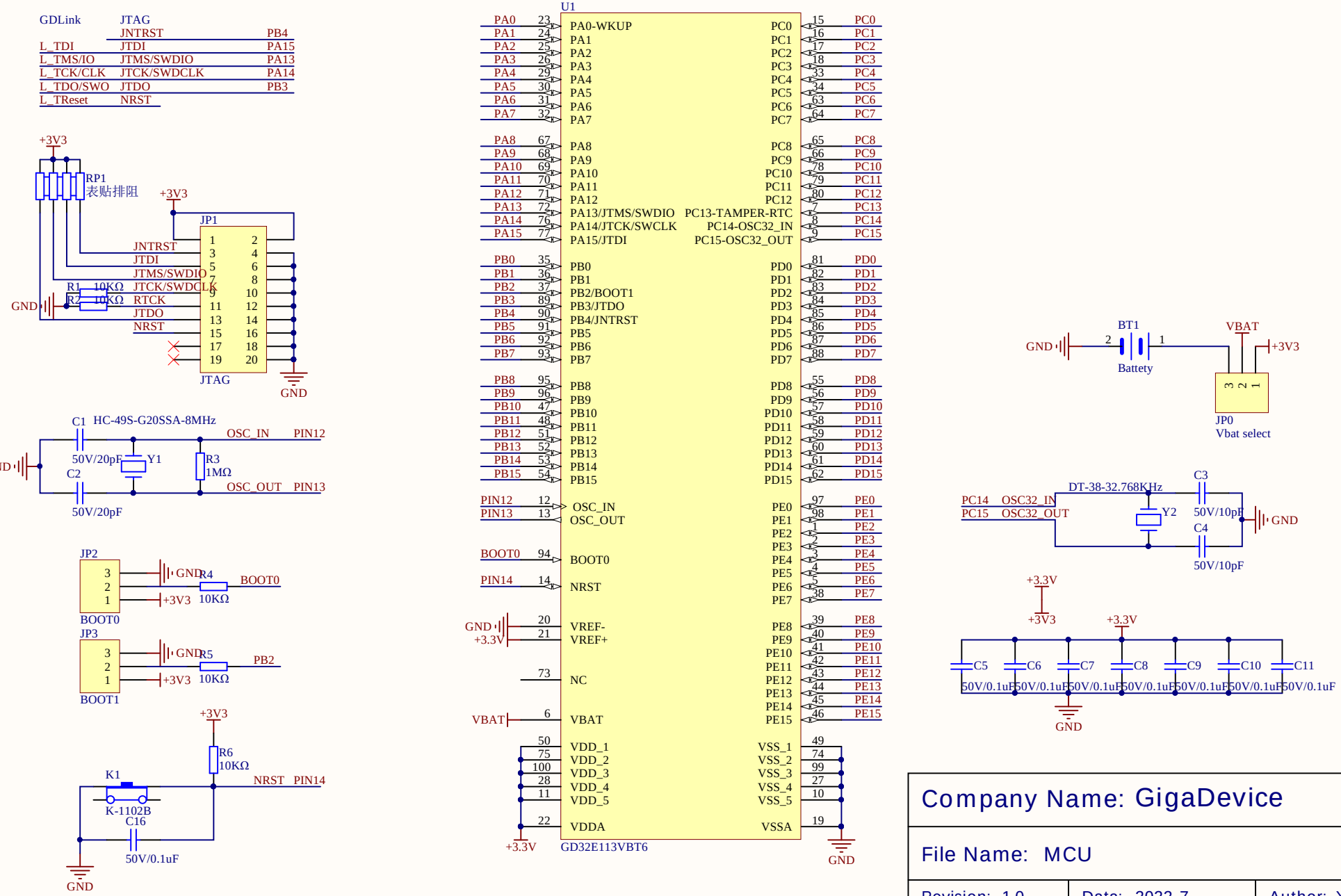

Company Name: GigaDevice

File Name: MCU

Revision: 1.0 | Data: 2022-7 | Author: XuFei

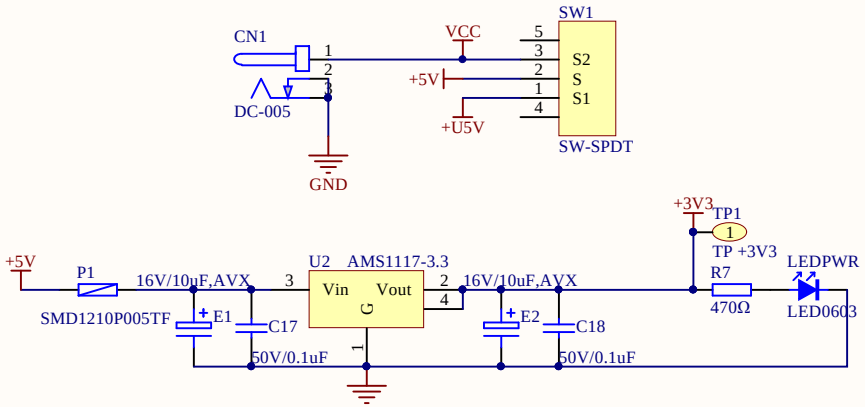

Company Name: GigaDevice		
File Name: Power		
Revision: 1.0	Data: 2022-7	Author: XuFei

SPI Flash

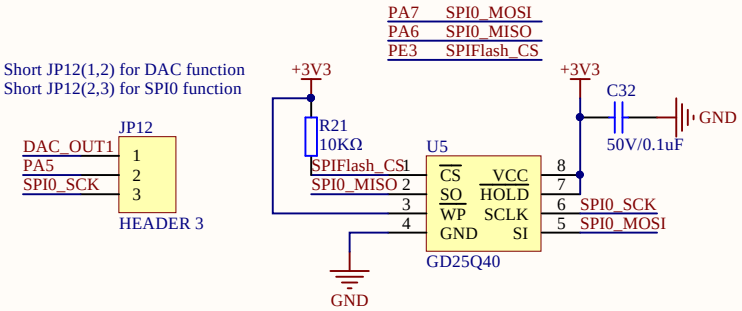

Company Name: GigaDevice		
File Name: SPI		
Revision: 1.0	Data: 2022-7	Author: XuFei

USART0/USART1

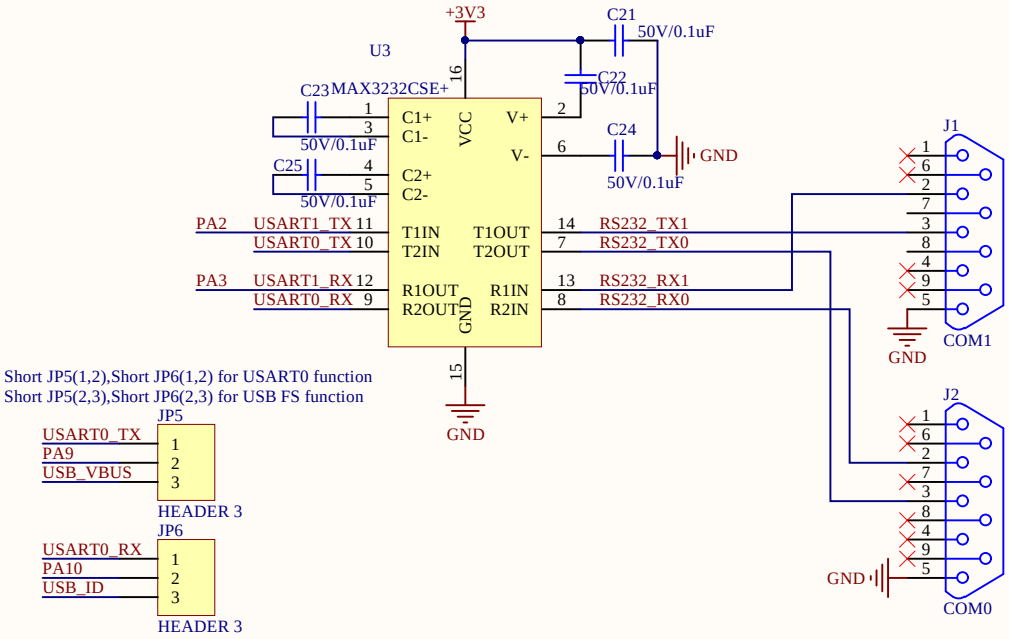

Company Name: GigaDevice		
File Name: USART		
Revision: 1.0	Data: 2022-7	Author: XuFei

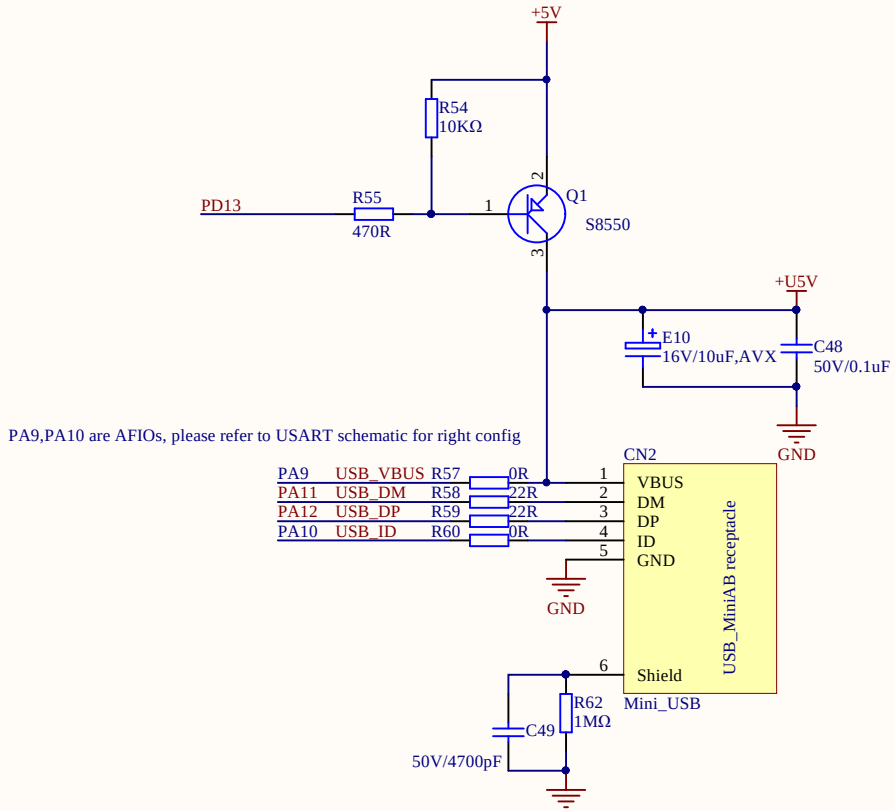

Company Name: GigaDevice		
File Name: USBFS		
Revision: 1.1	Data: 2022-7	Author: Xufei

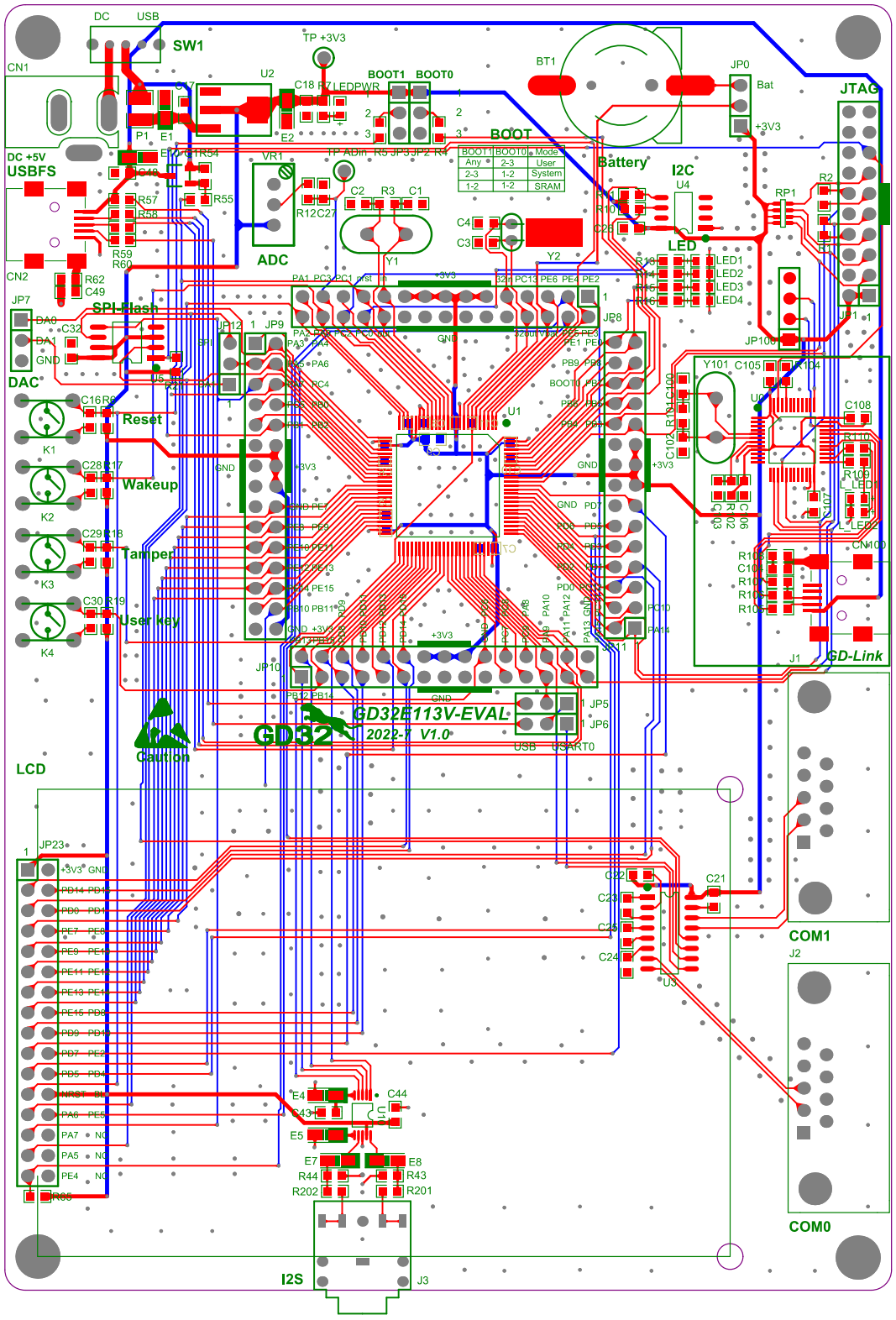

DC
USB
SW1
CN1
TP +3V3
U2
C18
LEDPWR
BOOT1
BOOT0
BT1
JP0
Bat
+3V3
JTAG
BOOT
BOOT1 BOOT0 Mode
Any 2-3 User
2-3 1-2 System
1-2 1-2 SRAM
Battery
I2C
U4
RP1
R2
DC +5V
USBFS
VR1
ADC
R12 C27
C2 R3 C1
C4
C3
Y1
Y2
LED
LED1
LED2
LED3
LED4
CN2
R62
C49
JP7
SPI-Flash
DAC
Reset
Wakeup
Tamper
User key
K1
K2
K3
K4
U1
JP8
JP100
Y101
C105
C108
CN100
GD-Link
J1
JP10
GD32E113V-EVAL
2022-7 V1.0
GD32
Caution
USB
USART0
JP5
JP6
LCD
JP23
C22
C21
C23
C25
C24
U3
COM1
J2
COM0
E4
C44
E5
E7
E8
R44
R43
R202
R201
I2S
J3