ADC

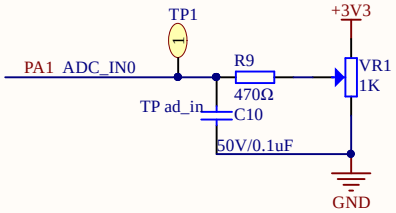

Company Name: GigaDevice		
File Name: ADC		
Revision: 1.0	Data: 2023-4	Author: xu.zheng

I2C

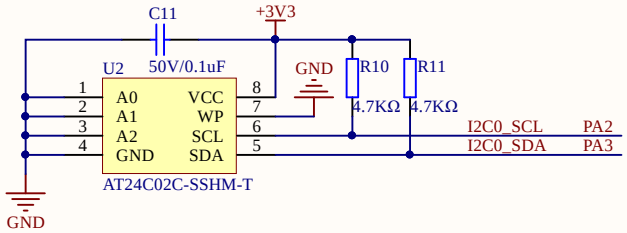

Company Name: GigaDevice		
File Name: I2C		
Revision: 1.0	Data: 2023-4	Author: xu.zheng

IFRP

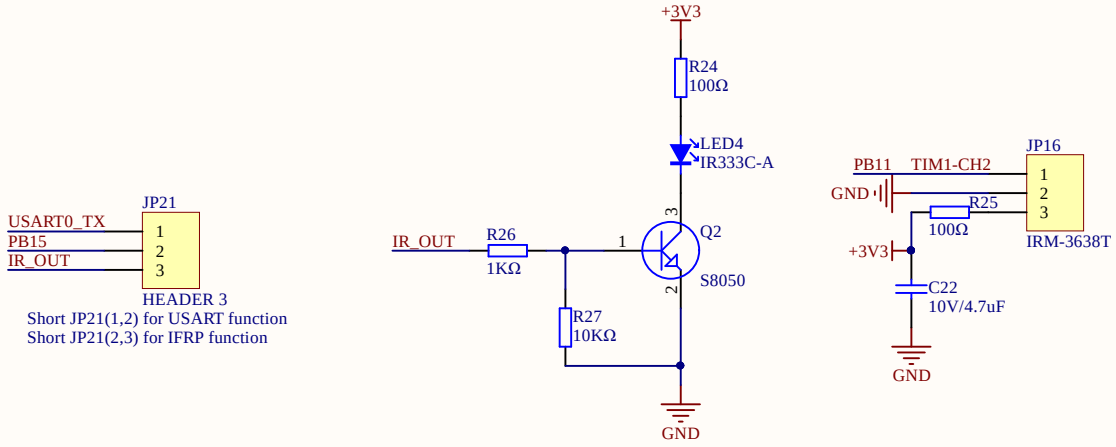

Company Name: GigaDevice		
File Name: IFRP		
Revision: 1.0	Data: 2023-4	Author: xu.zheng

SPI Flash

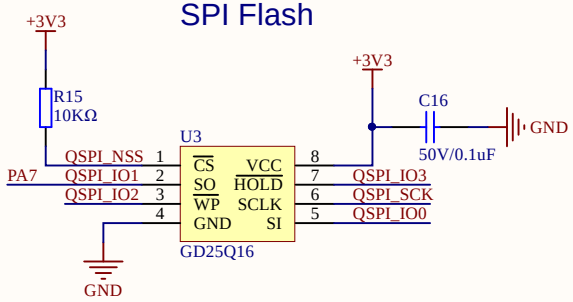

LCD

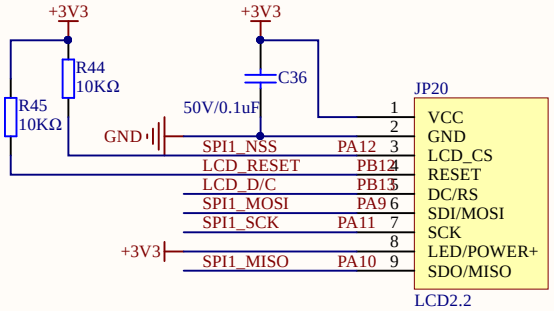

Company Name: GigaDevice		
File Name: LCD		
Revision: 1.0	Data: 2023-4	Author: xu.zheng

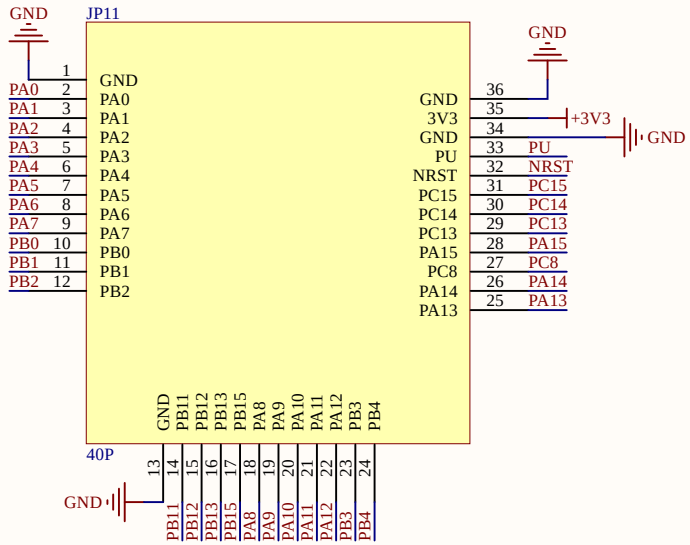

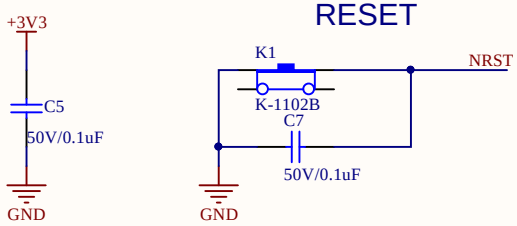

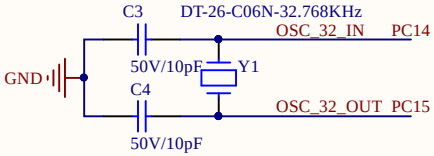

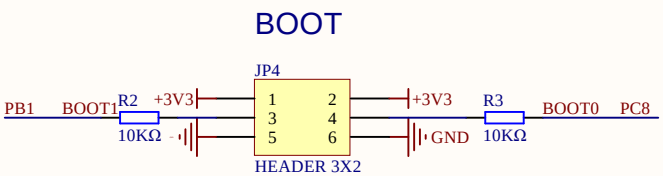

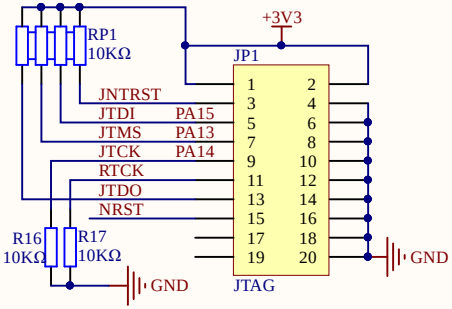

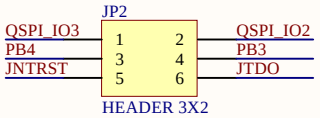

Short JP2(1,3)(2,4) for QSPI function
Short JP2(3,5)(4,6) for Jlink function

Company Name: GigaDevice		
File Name: MCU		
Revision: 1.0	Data: 2023-4	Author: xu.zheng

LED

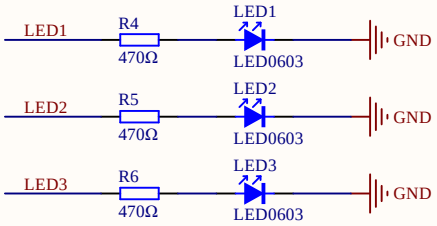

EXTENTION

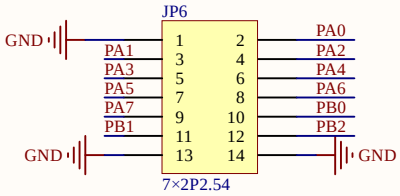

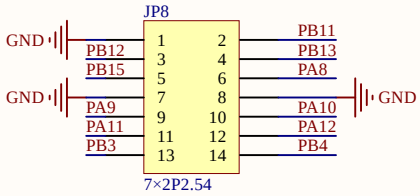

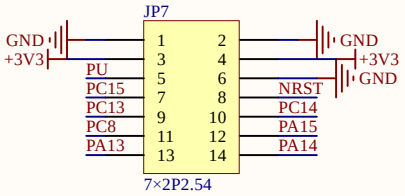

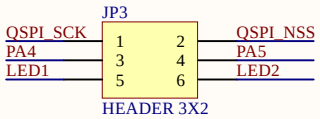

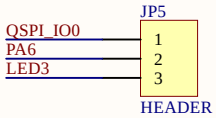

Short JP3(1,3)(2,4) for QSPI function
Short JP5(1,2)for QSPI function

KEY

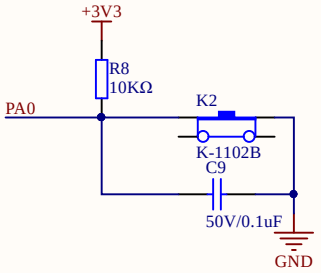

Company Name: GigaDevice		
File Name: Peripherals		
Revision: 1.0	Data: 2023-4	Author: xu.zheng

POWER

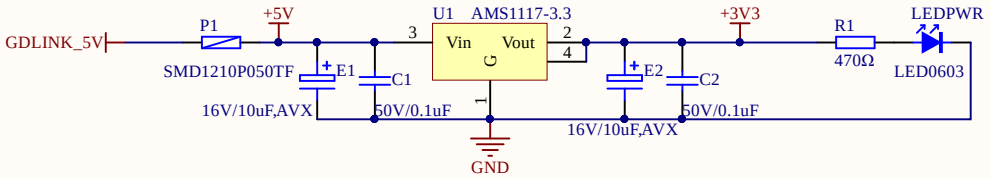

Company Name: GigaDevice		
File Name: POWER		
Revision: 1.0	Data: 2023-4	Author: xu.zheng

USART To USB

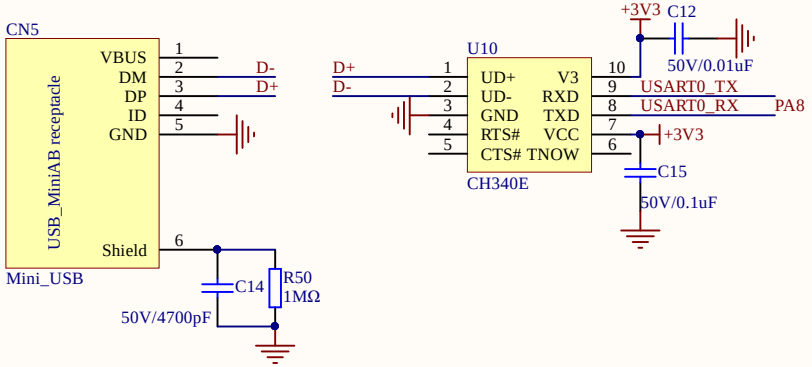

Company Name: GigaDevice		
File Name: USART		
Revision: 1.0	Data: 2023-4	Author: xu.zheng

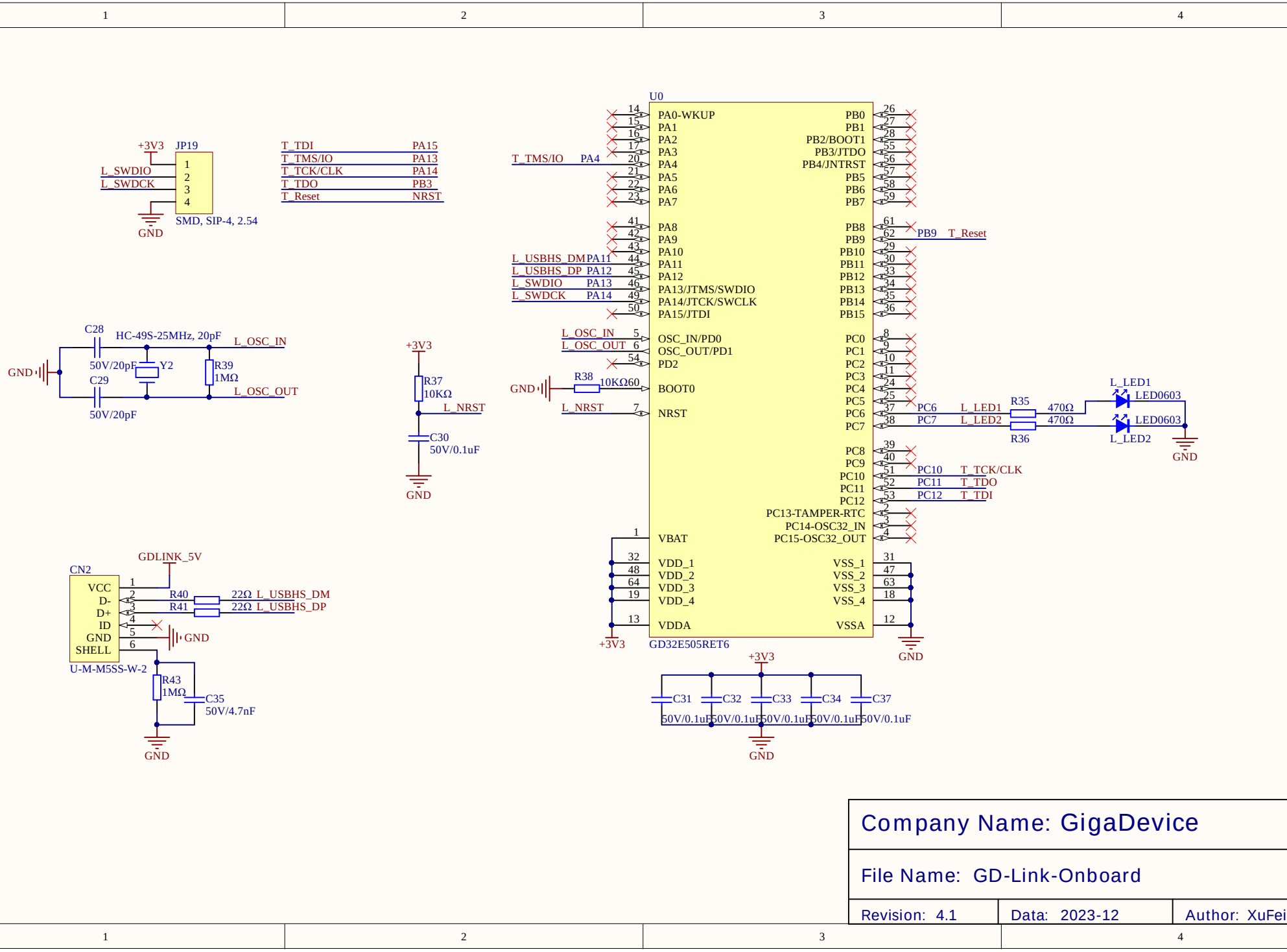

Company Name: GigaDevice		
File Name: GD-Link-Onboard		
Revision: 4.1	Data: 2023-12	Author: XuFei

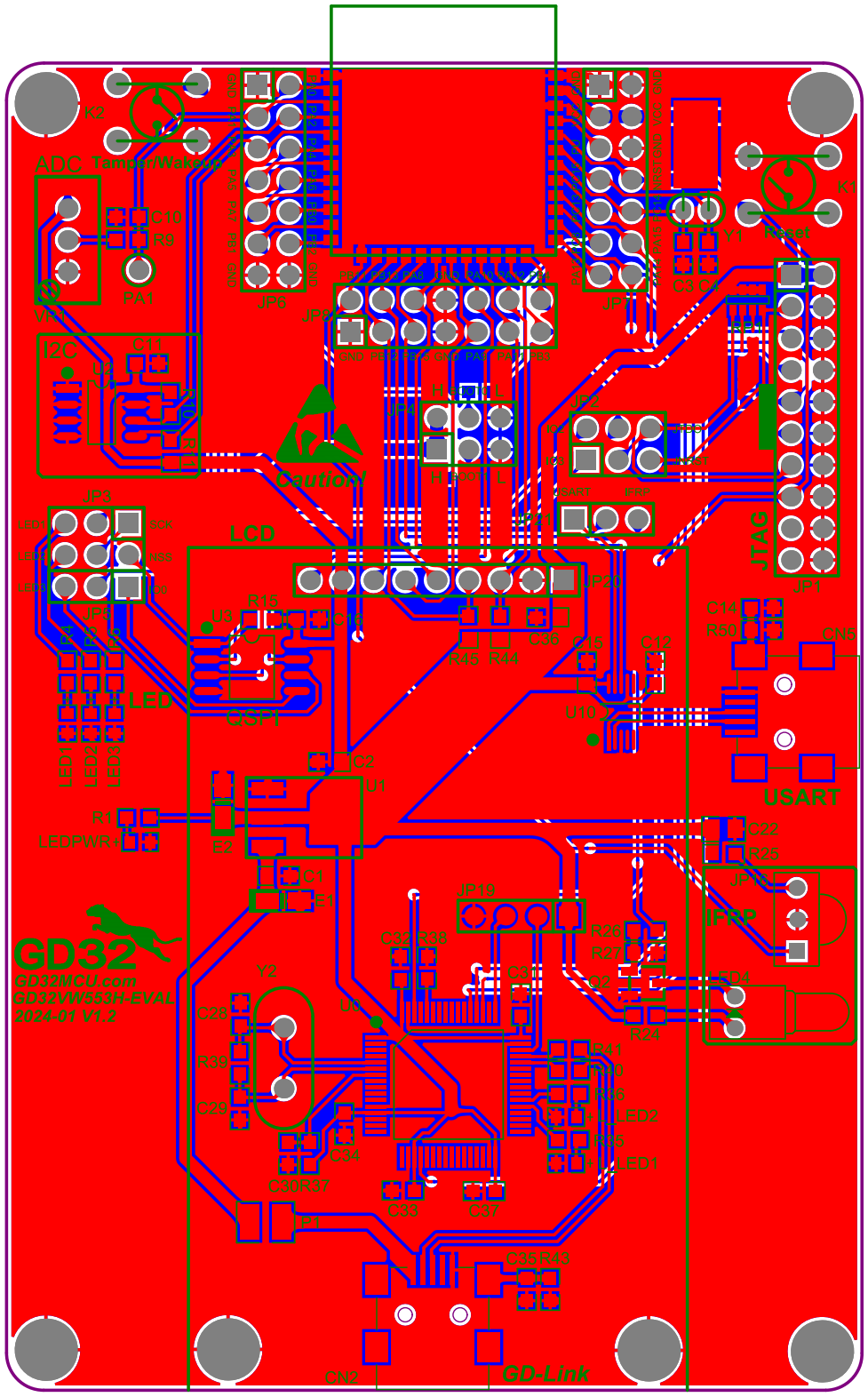
ADC
Tamper/Wakeup
I2C
LCD
JTAG
LED
USART
IPRP
GD32
GD32MCU.com
GD32VM653H-EVAL
2024-01 V1.2
GD-Link