Arduino

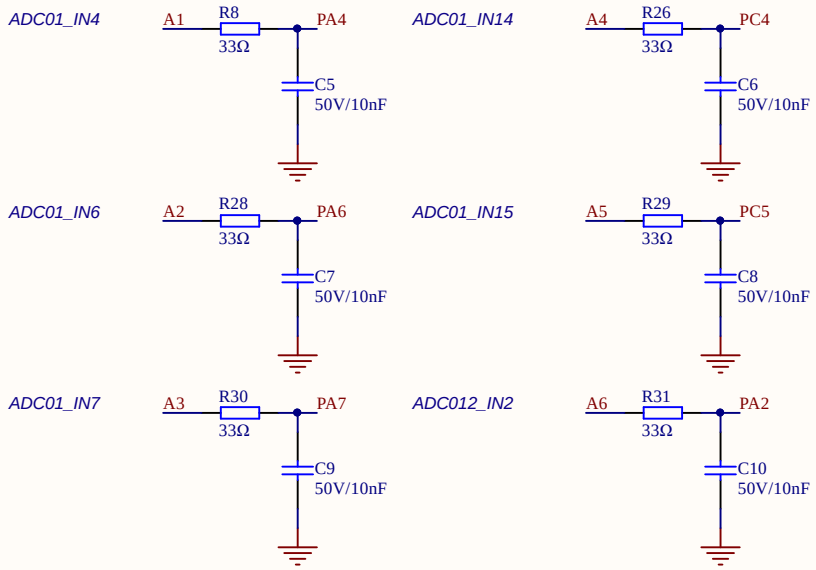

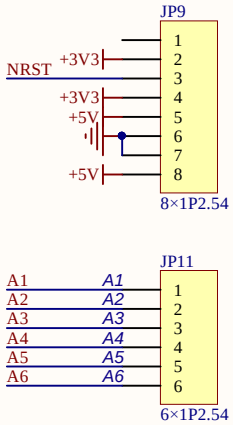

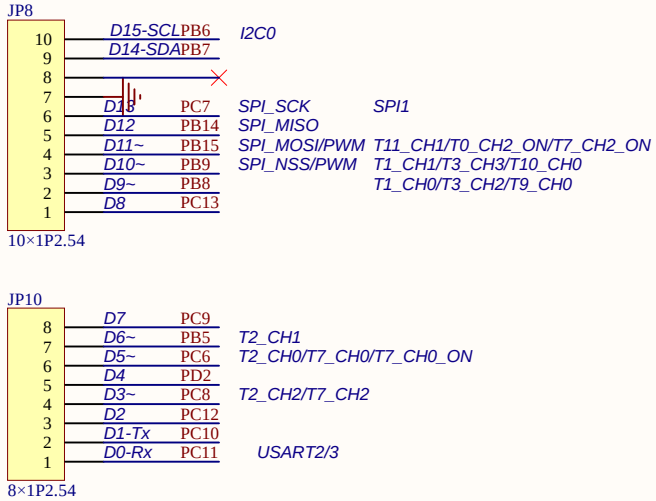

Company Name: GigaDevice		
File Name: Arduino		
Revision: 1.0	Date: 2023-12	Author: yihao.wu

LED

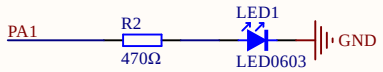

KEY

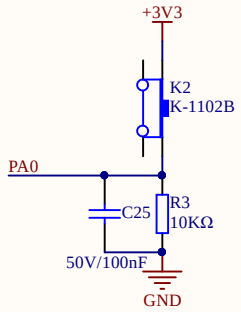

Extension Pin

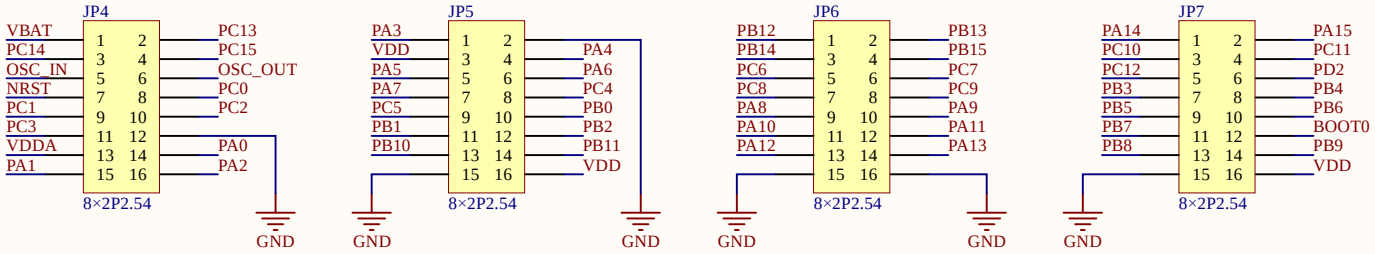

Company Name: GigaDevice		
File Name: Extension		
Revision: 1.0	Data: 2023-12	Author: yihao.wu

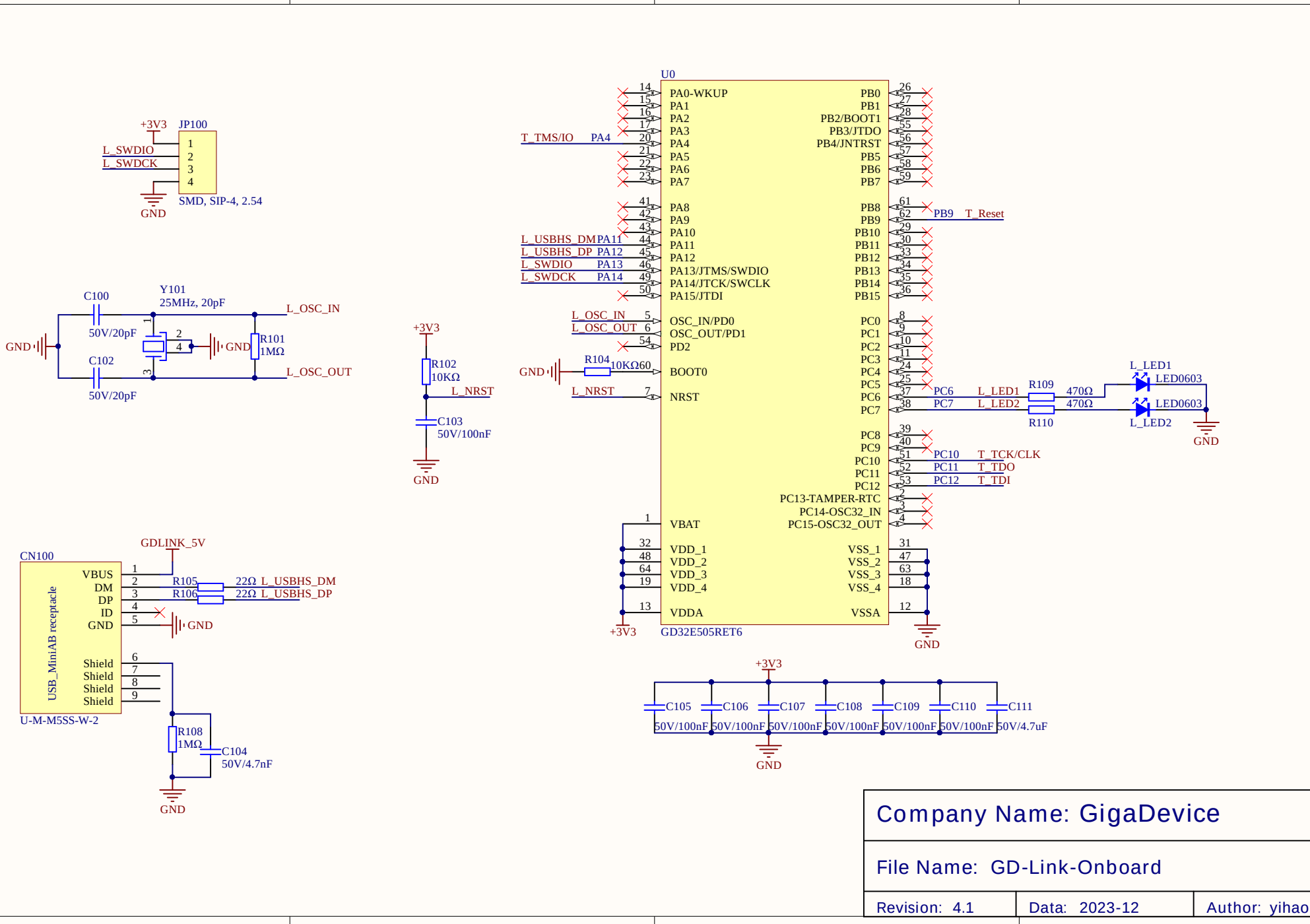

Company Name: GigaDevice		
File Name: GD-Link-Onboard		
Revision: 4.1	Data: 2023-12	Author: yihao.wu

MCU

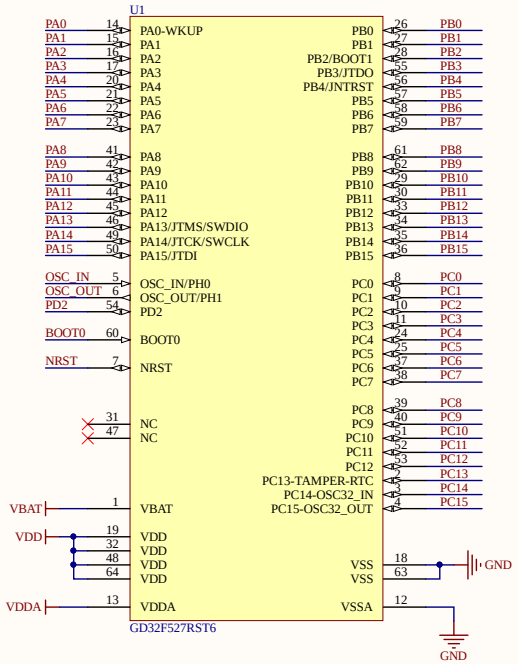

JTAG/SWD

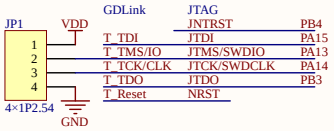

NRST

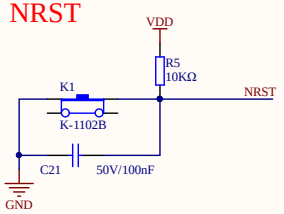

BOOT

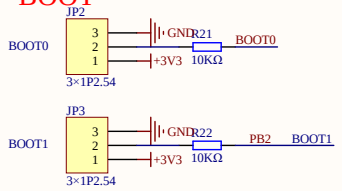

LXTAL&HXTAL

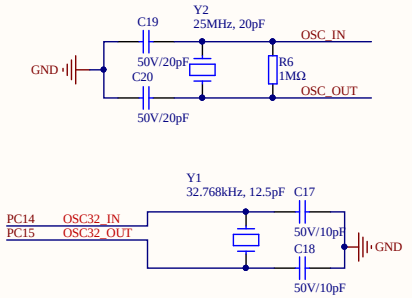

Filter

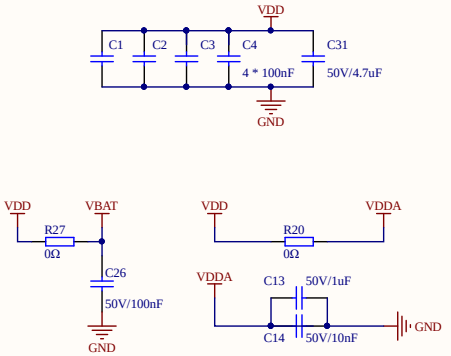

Company Name: GigaDevice		
File Name: MCU		
Revision: 1.0	Date: 2023-12	Author: yihao.wu

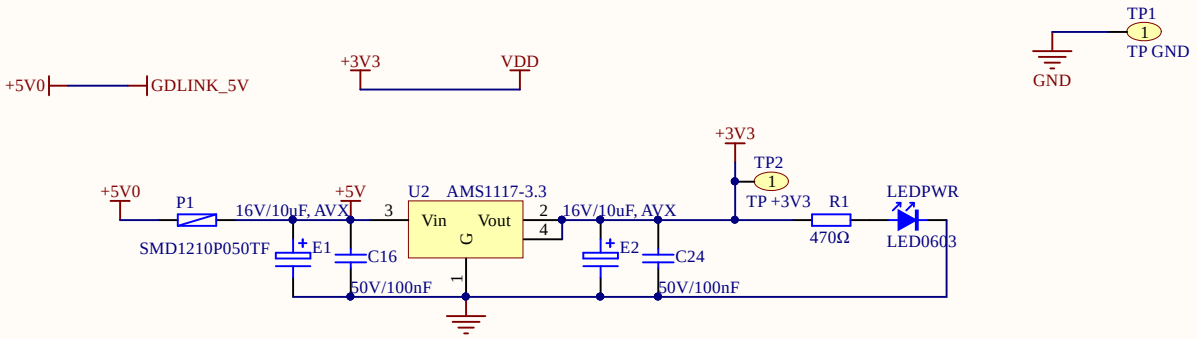

Company Name: GigaDevice		
File Name: Power		
Revision: 1.0	Data: 2023-12	Author: yihao.wu

USART To USB

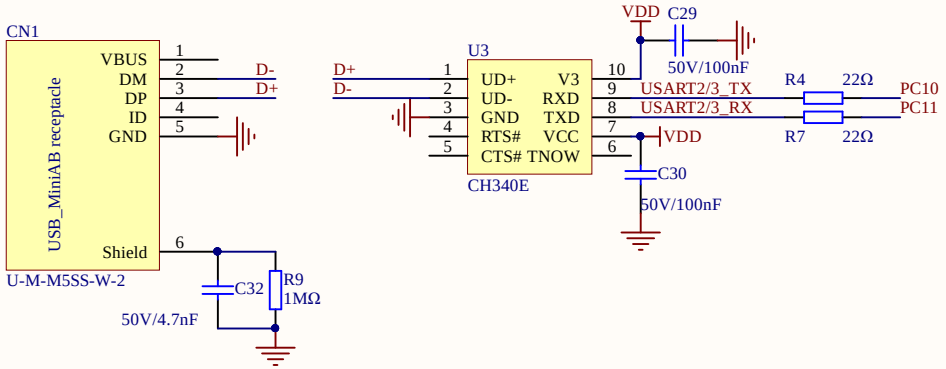

Company Name: GigaDevice		
File Name: USART		
Revision: 1.0	Data: 2023-12	Author: yihao.wu

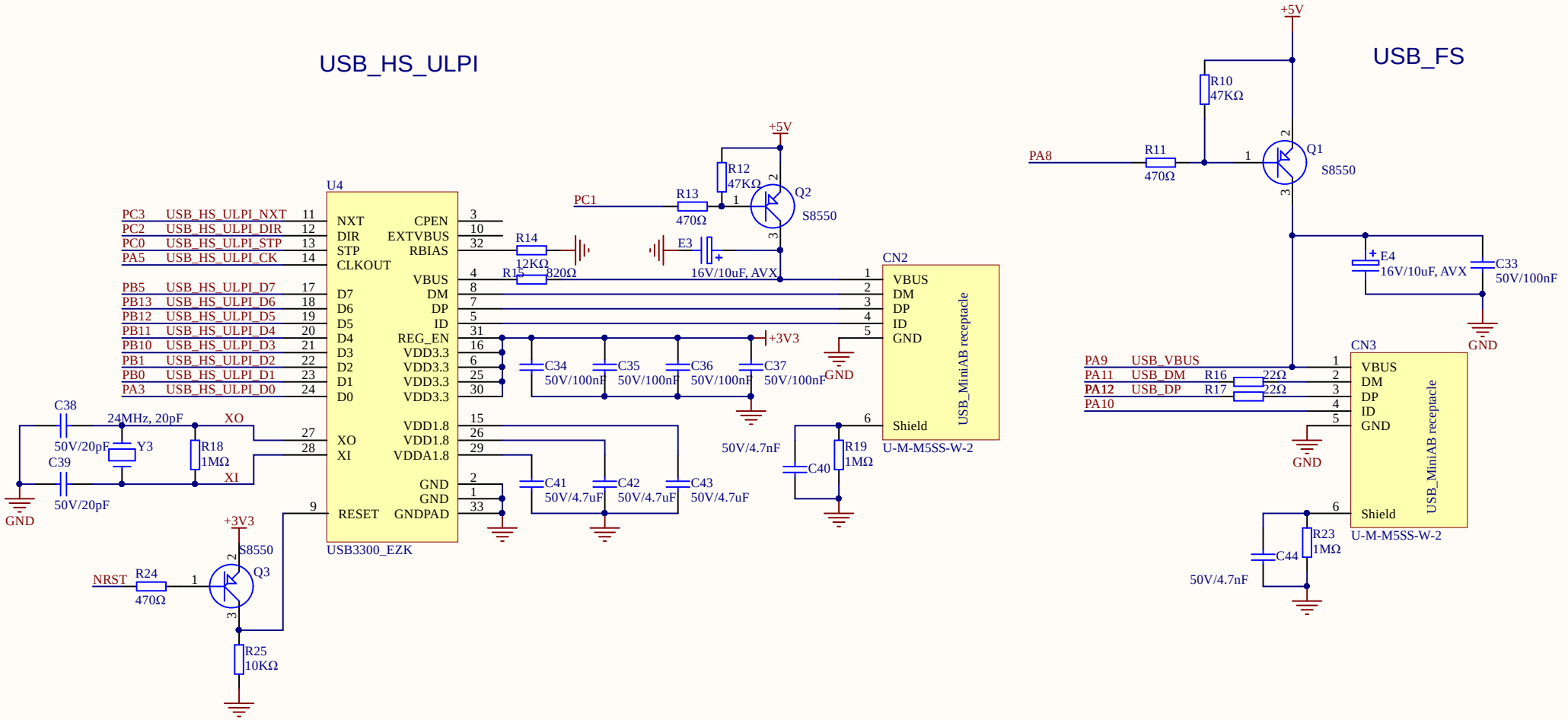

Company Name: GigaDevice		
File Name: USB		
Revision: 1.0	Data: 2023-12	Author: yihao.wu

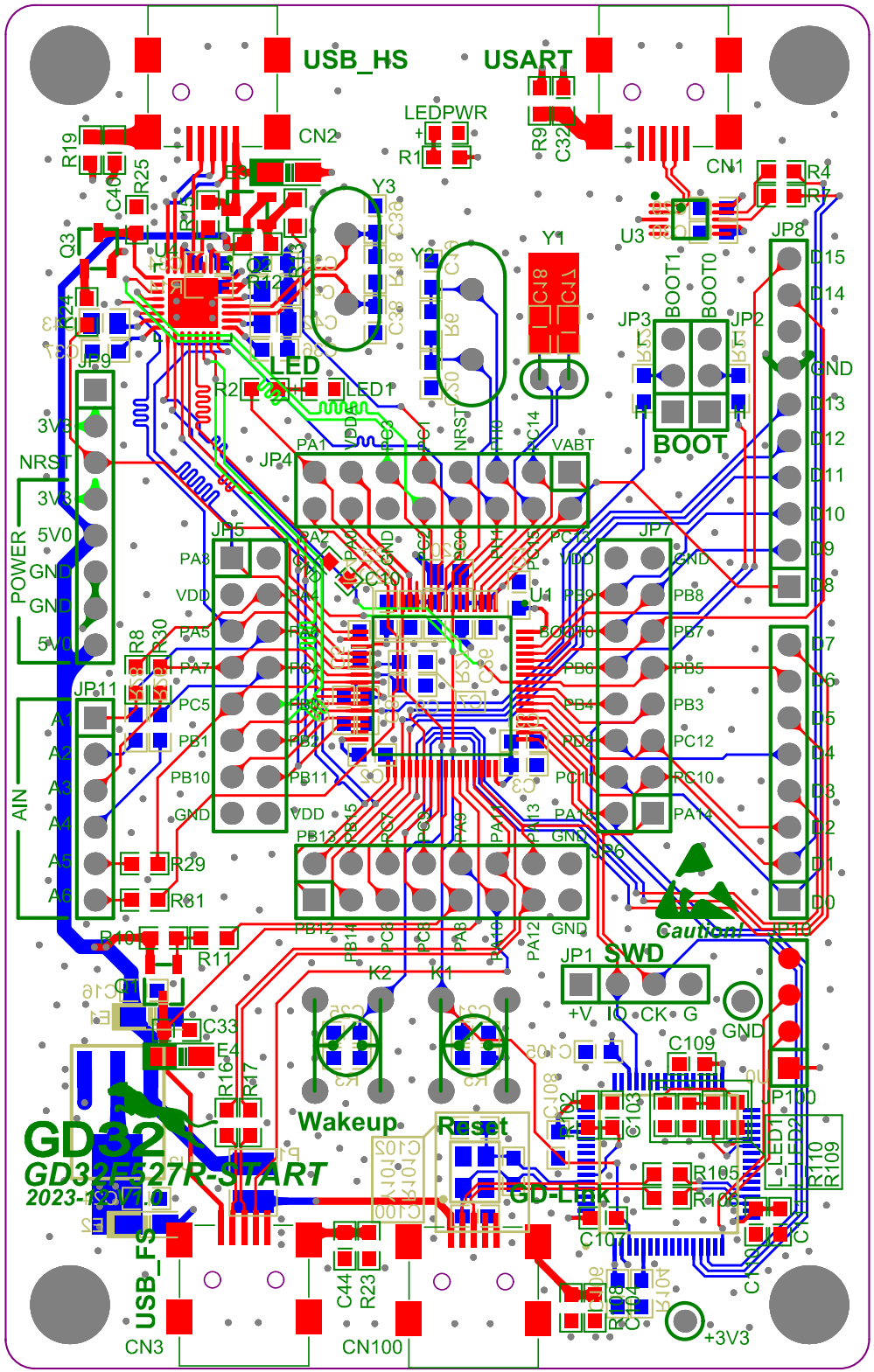
USB_HS
USART
LEDPWR
CN2
CN1
Y3
Y1
U3
JP8
JP3
JP2
BOOT1
BOOT0
BOOT
LED
LED1
JP9
3V3
NRST
5V0
GND
POWER
JP4
JP5
JP7
JP6
JP11
AIN
U1
Caution!
JP1
SWD
+V
IO
CK
G
Wakeup
Reset
GD-Link
GD32
GD32F527R-START
2023-10-07
USB_FS
CN3
CN100
+3V3