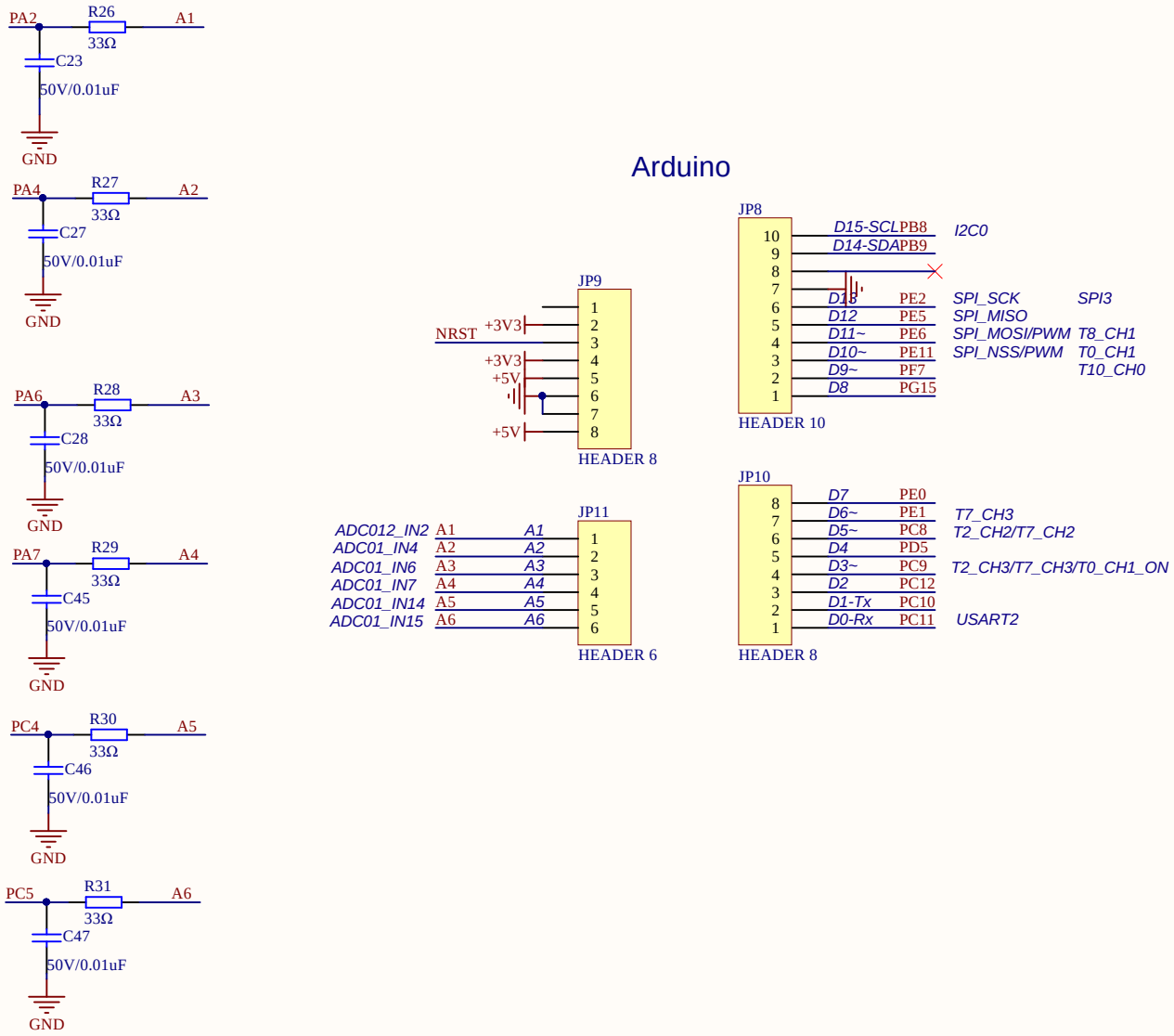

Company Name: GigaDevice		
File Name: Arduino		
Revision: 1.0	Date: 2023-12	Author: sijia.wang

LED

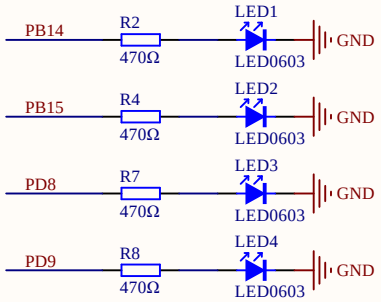

KEY

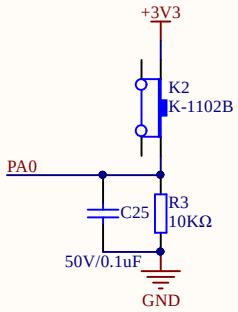

Extension Pin

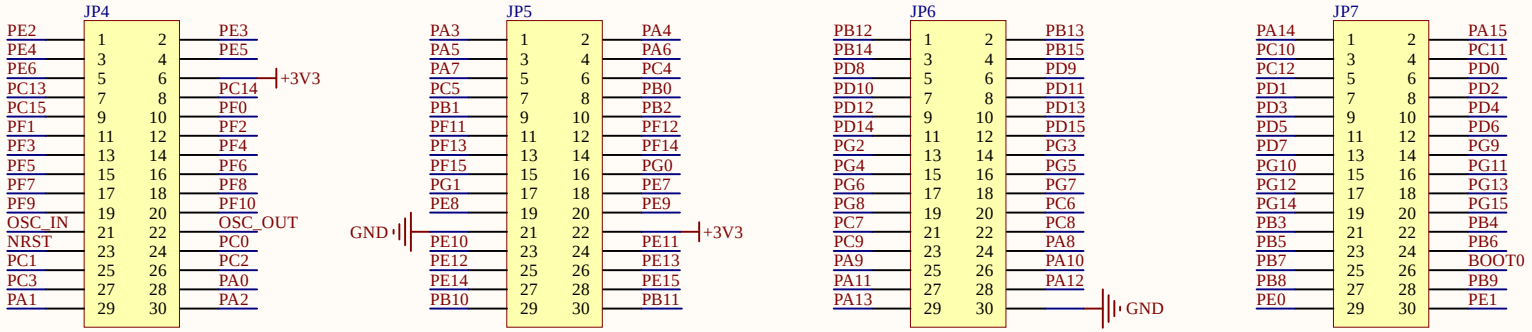

Company Name: GigaDevice		
File Name: Extension		
Revision: 1.0	Data: 2023-12	Author: sijia.wang

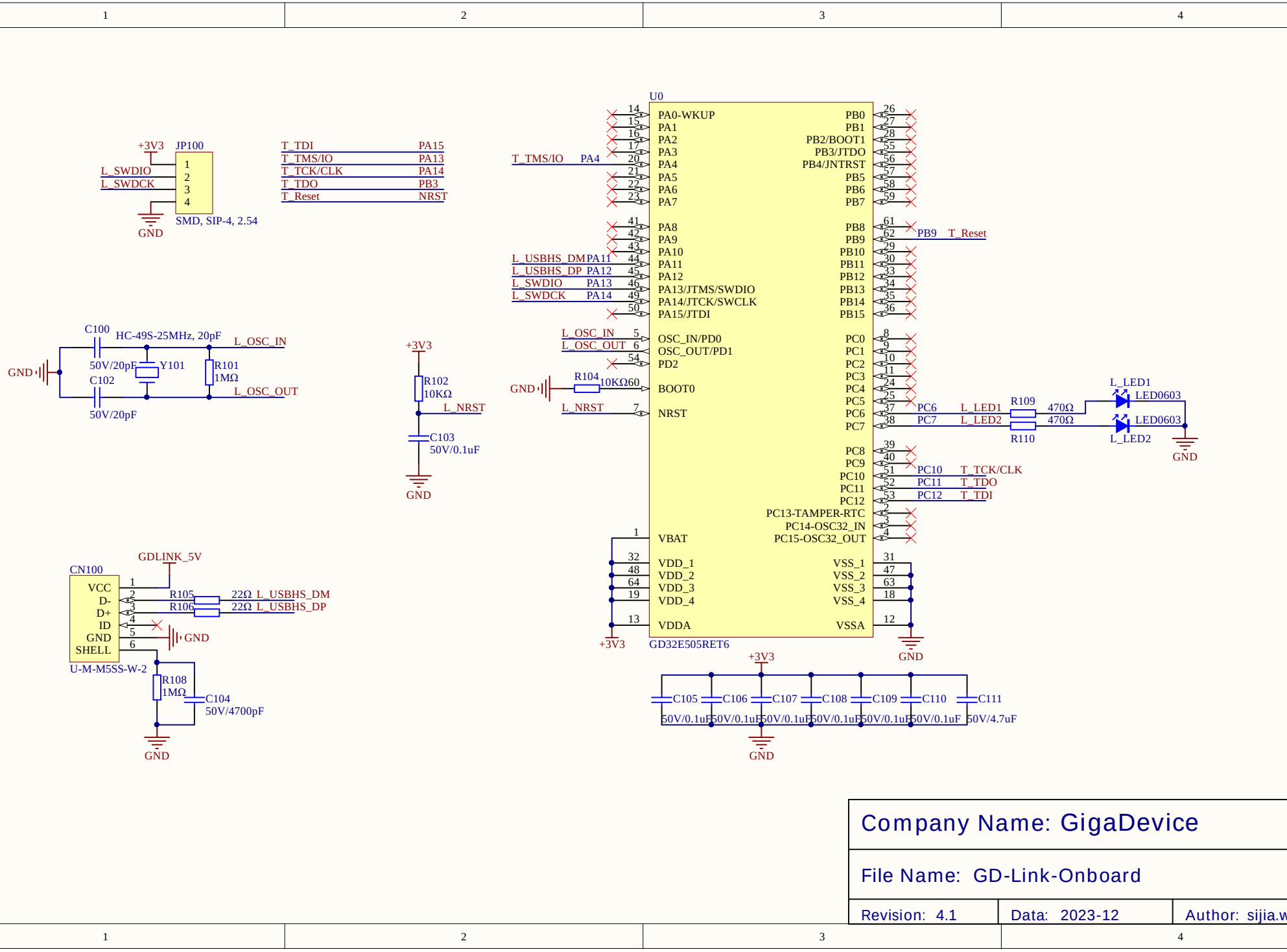

Company Name: GigaDevice		
File Name: GD-Link-Onboard		
Revision: 4.1	Data: 2023-12	Author: sijia.wang

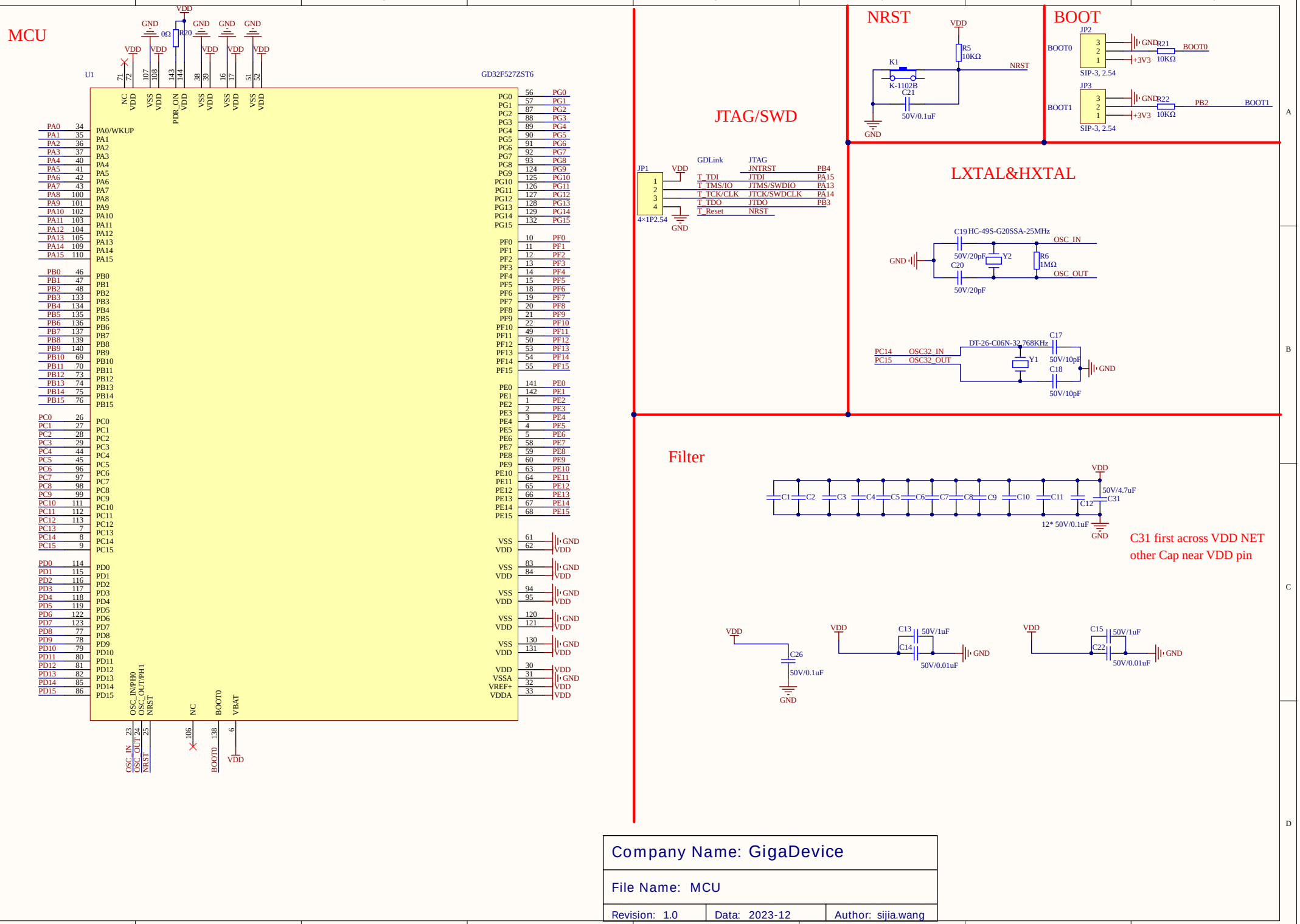
MCU
U1
GD32F527ZST6
JTAG/SWD
JP1
GDLink
JTAG
T_TDI
T_TMS/IO
T_TCK/CLK
T_TDO
T_Reset
JNTRST
JTDI
JTMS/SWDIO
JTCK/SWDCLK
JTDO
NRST
4×1P2.54
NRST
K1
K-1102B
R5
10KΩ
C21
50V/0.1uF
BOOT
JP2
JP3
BOOT0
BOOT1
R21
R22
SIP-3, 2.54
LXTAL&HXTAL
C19
HC-49S-G20SSA-25MHz
C20
50V/20pF
Y2
R6
1MΩ
OSC_IN
OSC_OUT
DT-26-C06N-32.768KHz
Y1
C17
C18
50V/10pF
PC14
OSC32_IN
PC15
OSC32_OUT
Filter
C1
C2
C3
C4
C5
C6
C7
C8
C9
C10
C11
C12
C31
50V/4.7uF
12* 50V/0.1uF
C31 first across VDD NET
other Cap near VDD pin
C26
50V/0.1uF
C13
C14
50V/1uF
50V/0.01uF
C15
C22
Company Name: GigaDevice
File Name: MCU
Revision: 1.0
Data: 2023-12
Author: sijia.wang

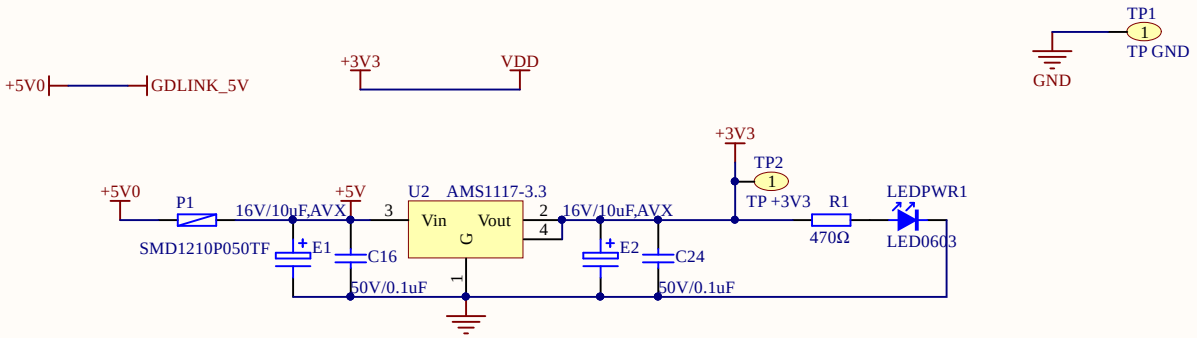

Company Name: GigaDevice		
File Name: Power		
Revision: 1.0	Data: 2023-12	Author: sijia.wang

USART0 To USB

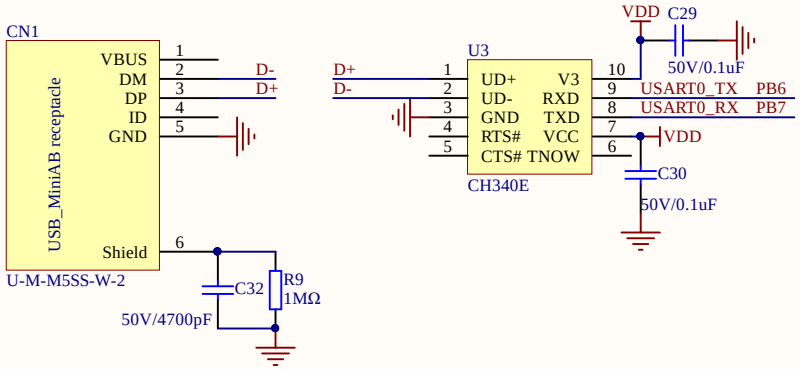

Company Name: GigaDevice		
File Name: USART		
Revision: 1.0	Data: 2023-12	Author: sijia.wang

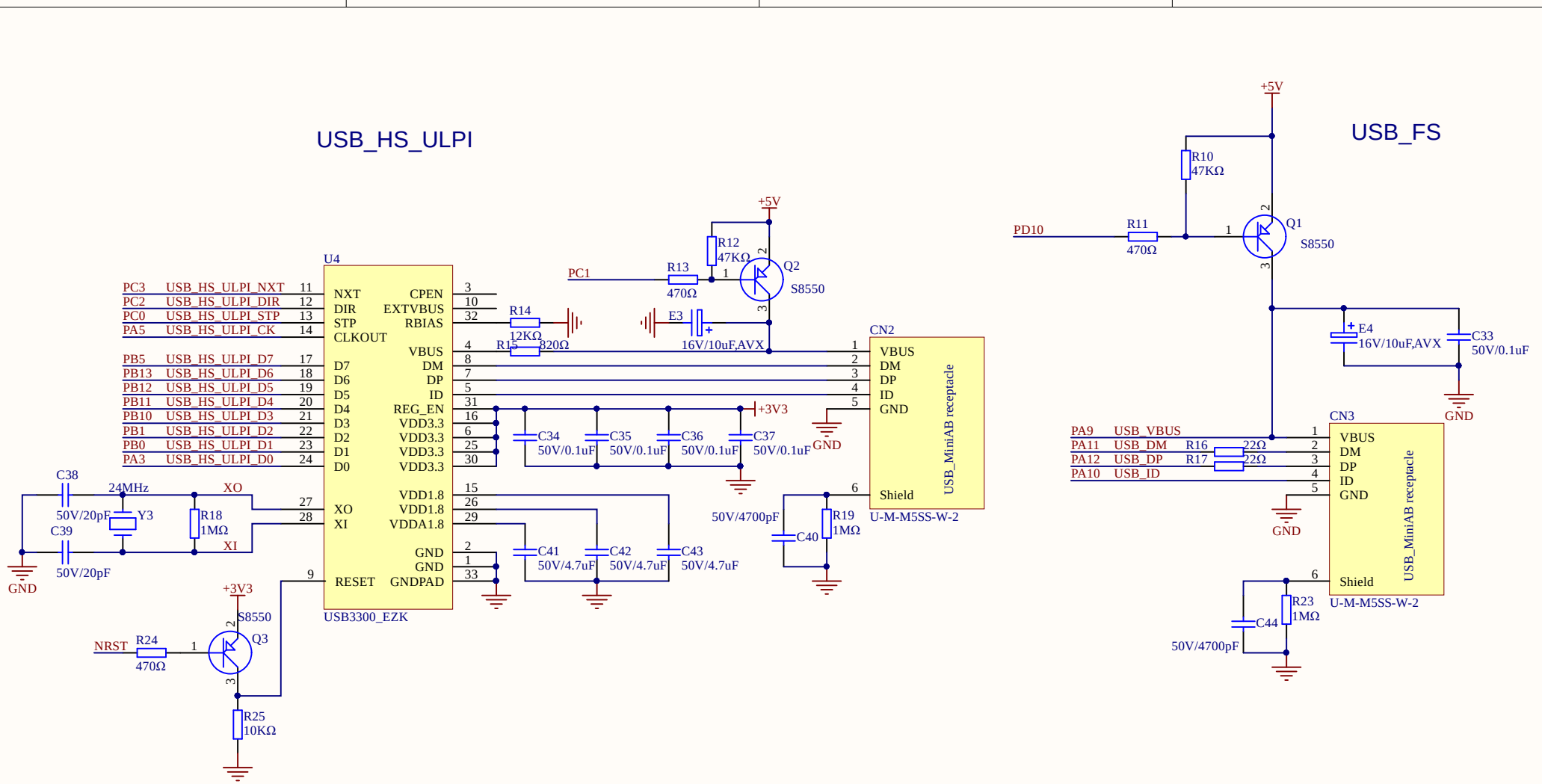

Company Name: GigaDevice		
File Name: USB		
Revision: 1.0	Data: 2023-12	Author: sijia.wang

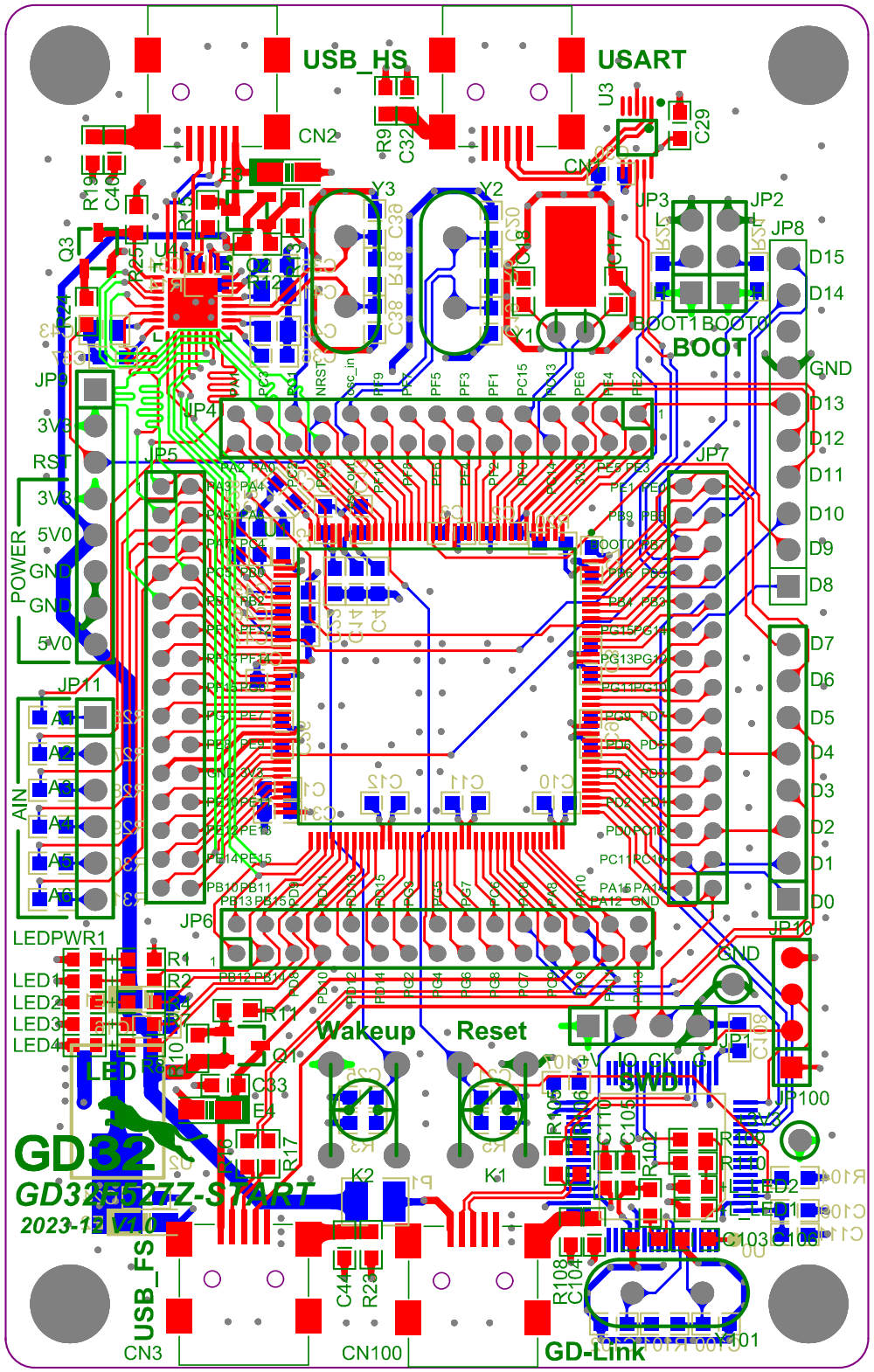
USB_HS
USART
CN2
U3
C29
R9
C32
Y3
Y2
Y1
JP3
JP2
JP8
D15
D14
BOOT1
BOOT0
BOOT
GND
D13
D12
D11
D10
D9
D8
D7
D6
D5
D4
D3
D2
D1
D0
JP9
3V3
RST
3V3
5V0
GND
GND
5V0
POWER
JP4
JP5
JP7
JP11
AIN
JP6
JP10
GND
LEDPWR1
LED1
LED2
LED3
LED4
R1
R2
R11
Q1
C33
E4
R17
Wakeup
Reset
K2
K1
JP1
JP100
SWD
GD32
GD32F527Z-START
2023-12 V1.0
USB_FS
CN3
CN100
GD-Link
C44
R23
R108
C104
C103
C106